MECS
Modern Energy Cooking Services

Solar PV integrated clean cooking for grid connected areas: A field implementation



M. Rezwan Khan
Professor, Dept. of EEE
United International University, Dhaka, Bangladesh

April 2021

This material has been funded by UKAid from the UK government; however, the views expressed do not necessarily reflect the UK government's official policies.

Loughborough University
ESMAP Energy Sector Management Assistance Program
UKaid from the British people
endev

Executive Summary

United International University (UIU) conducted an MECS funded research project titled 'Solar PV based grid connected inverterless cooking solution' (2019-2020) where a new idea on inverterless integration of solar PV in grid based electric cooking system was developed. Replacing the inverter by a much lower cost circuit arrangement, the overall energy cost can be reduced as the inverter cost account form more than 25% of the energy cost in small PV systems. In a lab set up, the grid connected PV system supplemented more than 50% of the total cooking energy, and the overall energy cost of cooking for a family of 4 person was estimated to be less than GBP 5 per month (including the levelized cost of PV power). The lab-based results indicated its potential in real life application and MECS along with EnDev (GIZ, Germany) came to an agreement to jointly fund this project to conduct field study with limited users. It was decided that three domestic and three commercial users would be chosen for the study.

The project started in July 2020, when the corona pandemic was at its peak in Bangladesh. Considering the vulnerable situation in the field, we decided not to go for a full scale survey in selecting the users, but limit it within the low paid UIU employees and their relatives and friends who live in the per-urban areas of the Dhaka city. We also tried to keep the users close to the university for the sake of easy monitoring of the systems.

While selecting the domestic and commercial users, selection of domestic users was relatively simple. But choosing the commercial users proved to be a very difficult task, particularly to get the free space to install the solar panels. So, the system installation for the commercial users were delayed. Finally, we selected three households, two tea stalls and a small restaurant for our project implementation. Data collection duration for the households were 18 weeks, for the two tea stalls were 18 and 10 weeks and for the restaurant was 7 weeks.

The collected data shows a very encouraging picture of the energy usage pattern. Each of the households were connected to a 400Wp solar PV array. The households were provided with a multi-cooker and a curry cooker. Two of the households, having 6 members in the family, consumed a total cooking energy of 24.6 and 26.8 kWh per month with more than 60% share from the solar PV. Their monthly cooking electricity bill was less than BDT 100 (GBP1.0). However, they cooked 80-85% of their food using electricity and kept an alternative cooking arrangement in case there is load shedding. Before adopting electric cooking, their average cooking energy cost was close to BDT 1000 (GBP 9) per month.

The size of the solar PV array was 400Wp in case of the tea stalls. The tea stalls initially were consuming about 8 units per day, which was high in the sense that their electricity consumption cost came out to be similar to the cost when gas cylinders were used. The tea stalls used hot water all day long (from 8am in the morning to 9pm in the evening) and the electric kettles were generating significant amount of steam throughout the day. We realized that the generation of steam was the main source of energy loss and we redesigned the connection arrangement of the electric kettles and the electricity consumption was reduced to 4 units per day. After modification, the solar PV share was close to 25% and the cost saving when compared to the gas cylinder was close to BDT 900 (GBP 8.25). It is our realization that we should have connected a 600Wp solar PV array instead of 400Wp to increase the PV share close to 40% and that would have reduced the electricity bill by another 25%. However, such an increase in the investment would save enough electricity to have the payback period close to 3 years.

A 800Wp solar PV array was installed at the roof of the restaurant and we provided the owner with a rice cooker and an electric pressure cooker. The restaurant owner kept his gas cooking based cooking system for frying purposes but his cooking cost was reduced by BDT 2100 (GBP 20) per month and the PV share in the consumed electric energy was close to 55%.

When we looked at the economic aspect of the PV integrated cooking system, we found that if the users pay the average saved amount in their cooking energy bill as their monthly instalment, the system cost can be recovered within less 3 years. If microcredit based business model is adopted for the purchase of the system, the instalment cost may be marginally increased, but it still should remain attractive as the user becomes the owner of the system.

If we consider the prevailing situation in the field level in Bangladesh, lack of awareness seems to be one of the main challenges. Although people know about solar PV from the widely popular Solar Home Systems, cooking with PV integrated system has its own challenges. As the cooking power is low, it takes longer time (by about 30%) to cook in the system. But our field level feedback indicates that for most of the users slow cooking is not an issue once they understand the system, as they can do other household works during the spare time. At the same time, the chance of getting the food heavily overcooked or burnt is very unlikely and it reduces the constant attention of the user while the food is being cooked. However, frying is more challenging and in most of the cases the users keep an alternative cooking arrangement where most of the frying or baking is done. At least for one domestic user (out of three), keeping multiple cooking systems was considered inconvenient. When asked if he would buy such a cooking system, his answer was negative and he feels that he will shift to a new cooking system only if it can give the complete cooking solution including deep frying. It indicates that there will be some percentage of people who may not accept the system despite its low energy cost.

Getting space for roof top solar may not be easy in the city areas as it is difficult to get a roof that gets unshaded sunshine throughout the year due to other neighbouring tall buildings. Additionally, an apartment owner, living in a multi-storied apartment complex may not have the ownership of the roof to install solar PV. So, rural and peri-urban areas seem to be a better choice for the proposed system. Rapid uptake of the system in the rural and peri-urban areas will require policy level intervention, as many of the policy makers feel that widespread electric cooking may overload the power distribution system. It is also important to build technological backbone at the field level for repair and maintenance of the systems to achieve a smooth sailing.

Finally, it is important to convince the manufacturers that low power cooking is a reality and they should plan to produce low powered cooking appliances. In this project we had to adopt a lower voltage as there is no regular low power cooking appliance available in the world market.

List of contents

1. Introduction

Access to clean cooking facilities has become a global issue as conventional biomass-based cooking has two main adverse effects. First is the green-house gas emission and second is the health related issues arising from bad kitchen hygiene due to the incomplete combustion of the biomass. It is a usual mindset that cooking is an energy intensive process and electric cooking will be expensive. This is not an unfounded thinking pattern as the power rating of most of the cooking appliance is quite high, much higher than required for a reasonable cooking process. In the developing countries electric cooking also gives rise to another issue of power distribution system getting over loaded. So, reducing the cooking power and increasing the share of renewable energy in the cooking power may address all these issues quite effectively.

In a lab based study [1], funded by MECS, it has been shown that it is possible to integrate solar PV in grid connected electric cooking system without using expensive grid tied inverters that keeps the electricity cost low. At the same time, it has been shown that it is possible to cook with less than 500W, whereas most of the hot plates or induction cookers consume 1500-2000W. More sophisticated cooking appliances like multi-cooker or electric pressure cooker consume 700-900W. So, the idea of cooking by 500W is usually received with scepticism. If we consider the heat loss in a usual electric cooking appliance, we will find that retaining heat inside the cooking pot/pan can make a very big difference. It is important to realize that cooking is done by the temperature inside the cooking pot and power is only the mean to keep it at the right temperature level. If the power loss can be reduced, cooking can be done with a much lower energy. At the same time, another study report on cooking diary project [2], also funded by MECS, shows that slower cooking can be more energy efficient.

These facts highlight the importance of a field level study where low power cooking system integrated to solar PV can shed light on the effectiveness, user friendliness and efficacy of such a cooking system.

2. Objective

Access to clean cooking facilities is still an issue for more than half of the world population. Shift of cooking technology from the conventional biomass to clean cooking has twofold impacts – one is the reduction in carbon emissions and the other is the improvement in the kitchen hygiene. Electric cooking is the cleanest from of cooking technology and it is possible to design very efficient electric cooking utensils that may not be achievable in other types of cooking fuels. However, there is always a criticism to electric cooking from the view point that electricity is still predominantly generated by fossil fuels and cooking by electricity has an impact on the actual fuel burning at the power stations. The percentage of renewables are increasing in almost all the countries of the world irrespective of their economic condition or geographical location. So, carbon generation due to electric cooking will be diminishing with the addition of RE resources in the power systems. Considering the fact that roof top solar PV is gaining momentum in the recent years due to the drop in the PV prices, it is an option for the households to integrate roof top solar to the individual cooking systems so that the actual power consumption from the grid is reduced.

Modern Cooking Energy Services (MECS) funded a research project titled 'A solar PV based low cost inverterless grid integrated cooking solution' [1] to investigate the possibility of low cost solution

for grid integrated solar PV based electric cooking system for households using roof top solar PV. The project was completed in April 2020 and the findings indicate that such a cooking solution could be highly efficient and cost effective with more than 60% reduction in the consumption of the grid energy compared to the conventional electric cooking systems. However, the project was laboratory based and its actual performance under the field condition is yet to be studied.

This project has been jointly funded by MECS (UK) and EnDev (GIZ, Germany) to study the real-life impact of the solar PV based grid integrated cooking system. It was decided that there will be limited market survey on the availability of the electric cooking appliances in the local market and their price. In this study, three domestic and three small commercial installations had been planned in peri-urban areas of Dhaka city to study the efficacy of the proposed cooking system, feedback from the users and cooking energy cost to compare it with pre-existing cooking systems of the users. The project looked into the system cost, cooking energy contribution from the grid and the solar PV, estimating the monthly cooking energy cost for the conventional food items in the context of Bangladesh. It also looked into the possibility of micro-financing of the systems so that the users may buy the system by paying instalments.

3. Methodology

The methodology for the project was adopted following steps

a. The project proposal planned for three domestic households and three small commercial installations to be chosen in the peri-urban areas of the Dhaka city. Peri-urban areas are chosen due to the facts that most of the urban population use either gas from the national grid or use LPG gas cylinders for their cooking. Moreover, due to densely placed multi-storied buildings, many of the roof tops are not free to install solar PV and there is a lack of sufficient sunshine due to shading from the neighbouring buildings.
b. Initially, it was planned that data from a number of prospective users would be taken and then choose the more suitable ones from the data list. But due to corona virus pandemic situation, it became difficult to take a general survey and data was collected from UIU employees and their known friends and relatives living in the peri-urban areas of Dhaka. This ensured more reliable users, better user supervision and feedback from the user end at the cost of a more random and generalized end users.
c. PowerCom, a power company involved in the installation of substations, roof top solar PV and other power system related activities, was involved as a partner of the project. Besides the power system hardware installations, the company has a manufacturing unit that can design and fabricate small scale power system protection units. Although, UIU team performed the main design of the control circuit, PowerCom was entrusted with the responsibility to import the required electronic components and meters (not available in the local market), assemble them in their own manufacturing facility and then install them at the selected sites.
d. Cooking utensils used in the project were off the shelf products available in the market and used without any modification to the utensils.
e. At all the sites, energy meters were installed to monitor energy and power from the grid and the PV. The domestic users were trained to enter cooking data with

information on the type of food, amount of food and the corresponding time and energy consumption. For the commercial users (like tea stall), they were trained to keep the data on the number of customers they serve, amount of cooking done every day and corresponding energy data.

f. The collected data was analyzed after two weeks to see if the data had been collected correctly and to address any technical or physical problem the users face while adopting to the new cooking system.

g. The data was supposed to be collected for at least 3 months and then compiled to estimate the monthly cost for the installed cooking system. But due to corona virus pandemic there was delay in installation in some of the sites.

h. The user feedback data was collected at the end of the data collection period to understand their eagerness in the cooking system, any difficulty faced and get suggestions possible improvement of the system.

4. Limited Market Survey

A limited market survey was performed to understand the availability and cost of different electric cooking appliances and also their popularity. Enumerators went to different electrical appliance markets in the Dhaka city and collected the basic qualitative data. The limited market survey data is given in Table 1.

Table 1: Availability of electric cooking appliances in the local market.

Appliance	Availability	Price range, GBP	
Hotplates (1000-1300W)	Available, but not widely used for cooking. These are more used in shoe making factories.	9-13	
Rice/Multi cooker (700-1500W)	Available and has the highest penetration in the market compared to other electric cooking appliances	25-50	
Curry Cooker (1000-1800W)	Availability is limited and is not popular yet.	20-30	
Induction cooker (1800-2200W)	Available but still not very popular as they require special cooking pans.	25-40	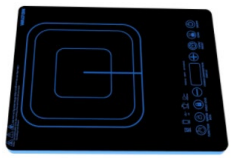

Infrared cooker (1800-2500W)	Available, but it is getting more popular compared to the induction cooker as no special pans are required	25-40	
Electric pressure cooker (700-1600W)	Availability is limited and not very popular yet as there is a lack of awareness. The price range varies by a large margin as some of the electric pressure cookers have more control options on the panel. The price also varies with the size of the EPC	50-80	
Electric kettle (1000-2000W)	Widely available having different design, size and shape. Electric kettles do not have a high market penetration in the households but are used mainly in offices and commercial installations for tea or coffee making. There is some limited use in the households in the urban areas.	8.5-30	

All these cooking appliances have local manufacturers and there is a significant price difference between the local manufactured ones and the imported ones. The branded local manufacturers include Miyako, Vision, Walton, Kiam, Noah, Vigo etc. Besides there are a number of non-branded cooking appliances available at lower price, but the quality of the products is not guaranteed.

5. Basic System Design

Based on the previous lab-based study, we used 130V DC at the appliance level for two main reasons, first is the low cost integration of solar PV and the grid in the cooking system and second is to reduce the cooking power. Reduced cooking power puts less pressure on the power system and at the same time is more efficient [2]. The basic system block diagram is shown in Fig.1.

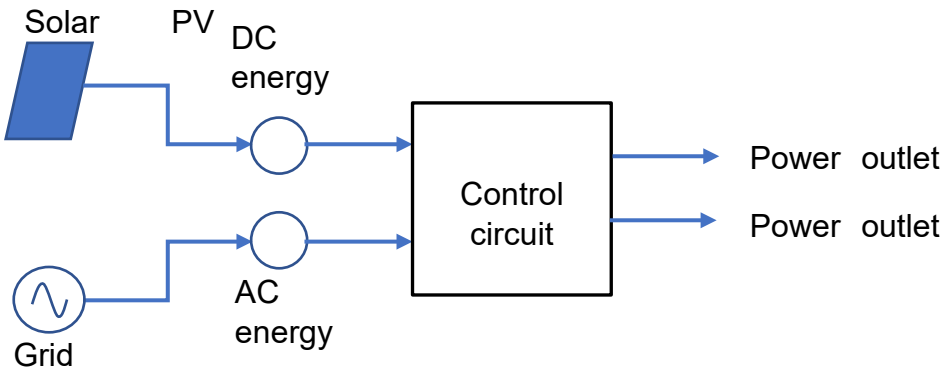

Fig.1. The block diagram of the basic system arrangement.

The size of the solar PV array varied for different applications and the circuit arrangement is presented in the respective sections. The control circuit uses AC to DC converter to convert the grid AC to a low voltage DC (130V) and then connect the solar PV on the DC side. Two power outlets are provided and their purposes are summarized in the table below.

Table 2. Output of the control circuit for different types of users

Type of user	Power outlet 1	Power outlet 2
Domestic	130V DC supply to connect the cooking appliances	Connected to a hot water system which is energized only when there is surplus PV output
Tea stall	130V DC supply to connect the electric kettles for hot water to make tea for the customers	Reduced AC voltage supply (150V) to preheat water to replenish the electric kettle for tea making when necessary
Restaurant	130V DC supply to connect the cooking appliance. The voltage will go slightly higher when there is surplus PV power so that the cooking appliance would consume more power to reduce PV power wastage	This power outlet is similar to the power outlet 1.

Individual circuit diagrams are presented in the respective section when discussing about the domestic user, tea stall or the restaurant. Some of the circuit components used in all the control circuits have the same rating and they are described below.

AC to DC Converter: The AC to DC converter is a custom-made device imported from China. These devices are usually named as LED drivers that convert the input AC to an output DC with a

voltage regulation less than 2% under varying load conditions. The LED drivers commonly available in the market have a maximum output voltage of 48VDC and hence a 130VDC output required some circuit modifications. Due to pandemic situation, the timely delivery of the AC-DC converters deadline was shifted a number of times and we finally received it almost 6 weeks later than the original supply deadline (received in the 1st week of October). The Specification of the AC-DC converters are given below.

Brand-MW (Mean Well), Model- SE-600-130, country of origin- China
Input voltage –200V- 240VAC, 50Hz; Output – 130VDC, 4.6A

Energy Meters (AC and DC): Single phase AC energy meters are readily available in the local market and we chose a Bangladeshi brand for our setup.

AC Energy Meter: Brand-Navana, Model- ND560, Standard: IEC62053-21,
Country of Origin -BANGLADESH
Rated input voltage230VAC, 50Hz, rated current 5A, accuracy class 0.5.

However, the DC energy is not a common item for the Bangladeshi market and was not available locally. So, we had to import it from China. The specifications of the DC energy meter are given below.

DC Energy Meter: Brand-Acrel, Model- PZ72L-DE/CJK, country of origin China
Rated input voltage 800VDC and rated current is 20A, accuracy class is 0.5.

Both the energy meters give readings of the voltage, current and power in addition to the energy reading in kWh.

6. Selection of Sites

The project is designed to have a total of 6 sites to collect the cooking energy data, 3 from domestic and 3 from commercial users. The selection criteria included the suitability of the sites from availability of sunshine point of view, members in the household (should not exceed 5/6), level of education and interest in a research project like this and their economic ability to continue with the system after the project is complete. Initially, it was intended that a preliminary survey will be conducted from peri-urban areas around Dhaka city, preferably places close to the UIU to have easy monitoring (movement in Dhaka city is a real challenge due to heavy traffic). However, the outbreak of corona pandemic has changed the situation drastically, as it was not safe to send an enumerator to different places for data collection. So, we decided to select suitable candidates from within the university employees and their families who fulfil the selection criteria mentioned above. The questionnaires developed for the data collection has been given in the Appendix A. The details of the selected sites and the selected users is given in section 6.1 and 6.2.

6.1. Domestic Users

The starting time of the project coincided with the surging COVID-19 infection in Bangladesh that limited our physical search for domestic users. Considering the adverse field condition, we limited our search within our known circle, like the low income employees of UIU and their friends and

relatives living in the peri-urban area of Dhaka city. The UIU employees had been very cooperative and we had been successful in selecting three domestic users, two in a location called Keraniganj, almost 90 minutes journey from the university and another one close to the university area. While selecting the users, we made sure that their roof top gets unshaded sunshine throughout the year.

System for Domestic Users

The basic block diagram of the installed system for the domestic users is shown in Fig.2.

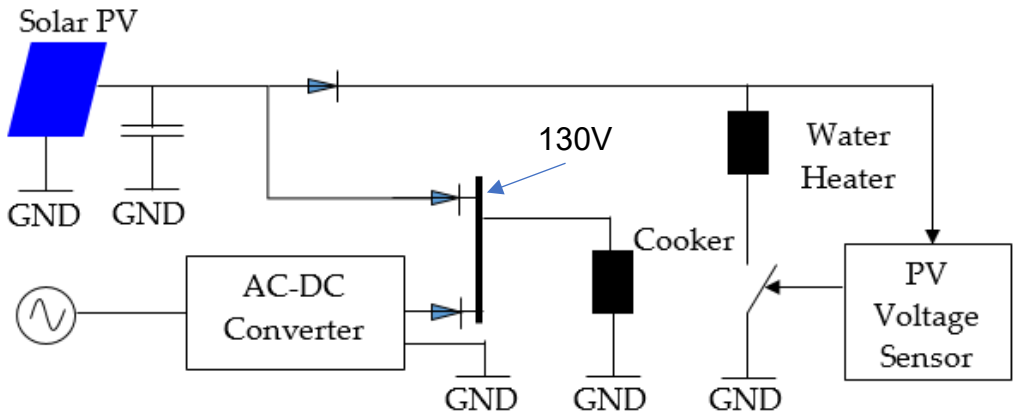

Fig.2. Basic block diagram for the installed domestic cooking system.

The grid supply AC is converted to DC using an AC-DC converter. The output voltage of the AC-DC converter was chosen to be 130V DC. Accordingly, the solar PV array has been designed to generate a maximum power point (MPP) voltage of 144V so that it always operates close (within 10%) to the maximum power point when sharing power with the grid via AC-DC converter. As the usual household cooking takes 3-5 hours every day, the water heater is connected to the PV such that it consumes the excess power from the PV array when the cooker is not in use or when the sunshine is high. So, the summary rating of the system was as follows.

All the cooking appliances were rated at 220V AC and had power ratings ranging from 700W to 1000W.
The water heater used was a hotplate with a 3.5L aluminium kettle. The logic in the control circuit switched ON the water heater when the PV panel voltage was higher than 135V and switched OFF when the PV panel voltage was 133V.

The lower operating voltage of the system, compared to the grid voltage, has been intentionally chosen (based on the finding of the previous MECS research project) for two reasons.

i. To reduce power consumption from the grid. The conventional electric cooking appliances consume 700W to 2000W and under such a power consumption scenario wide usage of electric cooking appliances may cause overloading of the transmission lines. We designed our system to consume power less than 500W.
ii. Slower cooking is more efficient due to the reason that the food temperature is kept close to 100°C for a longer period of time without the water being vigorously boiled. So, heat loss due to escaping water vapor is drastically reduced.

Cooking Appliances used: Initially, a 1.8L multi cooker having a power rating of 700W was provided. After observing for 2 weeks, based on their suggestion, a 3L curry cooker having a power rating of 900W was also provided. All the cooking appliances were rated at 220V AC. Actual power consumption by the cooking appliances when connected to the system voltage (130V DC) was 250W and 320W respectively.

Solar PV Array: For the domestic system eight 50Wp panel was used to obtain the 400Wp array. The specifications of the solar panels are given below.

Table 3. Specifications of Omera Solar, Multi-crystalline PV panels

Power rating, Wp	No. of cells in series	Open circuit voltage, V	Short circuit current, A	Voltage at MPP, V	Current at MPP, A
50	36	21	3.05	18	2.83

As all the array elements are connected in series, the maximum power point (MPP) voltage and the open circuit voltage comes out to be 144V and 168V respectively. The MPP voltage of the PV array is chosen higher than the designed operating DC voltage of 130V to achieve satisfactory energy extraction level under varying sunshine conditions. It is a well-known fact that MPP voltage of a solar panel reduces with decreasing sunshine condition and the MPP under average sunshine condition of Bangladesh (600W/m^2) will be ~5% lower than the rated MPP that is measured under Standard Testing Condition (1000W/m^2). Moreover, the average power loss does not exceed 5% when the operating voltage remains within 10% below the MPP voltage. The solar panel was mounted on the roof tops using steel frames keeping in mind a maximum wind speed of 160km/h.

Selected Domestic Users:

Three domestic users were selected close to the university area. The selected users were

Table 4. List of the domestic users.

Name of the user	Cooking fuel used	Amount need /month	Avg. Cost /month, BDT
Md. Sadek Hossain Family member 3	Cylinder gas	1 gas cylinder (12kg)	1000
Md. Jahir Hasan Family member 6	Gas cylinder and fire wood	0.5 gas cylinder (12kg) and 160-180kg fire wood (BDT 7.50/kg)	500+1125 = 1625
Md. Aslam Hossain Family member 6	Gas cylinder	1.5 gas cylinder (12kg)	1500

Each household was provided with a multicooker and a training session was conducted on how to use the appliance efficiently and safely. After 2 weeks, their feedback was taken and considering their suggestions we provided them with a curry cooker for better frying options. Details of the feedback is discussed in a later section. Besides the cooking appliances, a hotplate and an aluminium kettle was provided to connect to the second power outlet to make hot water from the surplus solar PV energy. The users were advised to use hot water from the kettle while cooking. This ensured better utilization of the solar PV energy.

The details of the selected domestic users for the project is given in tabular form below.

Address- Satarkul, Merul Badda, Dhaka-1212 No. of Family members – 4 (including 2 kids) Usual Cooking fuel – gas (uses both gas line and gas cylinder. Gas cylinder used when pressure is low) No. of burners used – 2 Cooking energy bill Tk. 1000/month	  Md. Sadek Hossain Owner Age-38 Education: SSC Profession: Business Yosra Akter (wife) Cooking member Age-32 Education: SSC Profession:
 Picture of the roof top solar panel	 Control panel on the kitchen wall and an electric hotplate

Address- Uttar Baherchor, Taranagar,Keranigonj,Dhaka. No. of Family members – 6 Usual Cooking fuel – gas cylinder, firewoods No. of burners used – 2 Cooking energy bill Tk. 1600/month	  Md. Jahir Hasan Owner Age- 39 Education- Class 8 Profession: Car Driver Sabiha (wife) Cooking member Age: 33 Education- Class 8 Profession: House wife
 Picture of the roof top solar panel	 Control panel on the kitchen wall and an electric hotplate

Address- Uttar Baherchor, Taranagar,Keranigonj,Dhaka. No. of Family members – 6 Usual Cooking fuel – Gas cylinder No. of burners used – 2 Cooking energy bill Tk. 1500/month	  Md. Aslam Hossain Owner Age- 42 Education- Class 8 Profession: Car Driver Rokeya (wife) Cooking member Age- 32 Education- Class 8 Profession: House wife
 Picture of the roof top solar panel	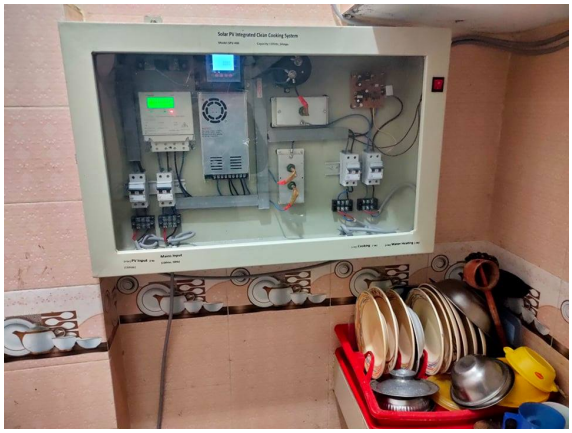 Control panel on the kitchen wall

Feedback on cooking after 2 weeks

The system performance was constantly monitored and first feedback was taken after 2 weeks. The summary of the feedback is given below.

a) Taste of the cooked food seems to be less tasty
b) It took longer time to cook
c) It was difficult to fry with multicooker
d) Chapati making for the breakfast was not possible
e) A larger size of the multicooker would be better as the capacity was barely enough for rice boiling for a family of 5 or 6.

We realized that the complaint about the taste of the food was related to frying. In Bangladesh, many families lightly fry the meat, fish or vegetable before cooking the curry and lack of frying had an adverse effect on the taste. Based on the feedback, we provided them with a second appliance called curry cooker. The usual thermostat setting of the multicooker is 105-110°C and that temperature is insufficient for frying. The curry cookers are designed to produce higher temperature like 160-180°C and both frying and cooking can be done in the same cooker. Regarding longer

cooking time, we advised them that they need not constantly attend the food cooking as the chance of food getting overcooked or burnt was quite low. They should plan to prepare for the next food item or do other household works while a food is being cooked. We requested them to boil rice more than once, if necessary, for the time being and promised them to give a larger multicooker at the end of the project.

Cooking Energy Data

The cooking energy, as collected from the three household shows a very encouraging trend. The data is presented in Table 5 below.

Table 5. Cooking energy data of the domestic users

Name of the user	Time of data collection, weeks	Average Monthly energy consumption, kWh	%from grid	% from solar PV	Average monthly electricity cost, BDT
Aslam	18	31.46	35.2	64.8	63.33
Jahir	18	34.28	34.5	65.5	67.66
Sadek	18	15.34	22.2	77.8	19.48

In Bangladesh, tariff for electricity increases for increased consumption of electricity. The tariff slabs for the domestic users, as downloaded from Power Cell website (Govt. of Bangladesh), is given below.

Table 6. Electricity tariff slabs for domestic users (2020-21)

Units, kWh	0-50	0-75	76-200	201-300	301-400	401-600	>600
Tariff, BDT	3.75	4.19	5.72	6.00	6.34	9.94	11.46

The selected domestic users are within the energy consumption range of 76-200 kWh/month and their tariff will be BDT 5.72. It is interesting to see that all the users had a share of energy from solar PV higher than 60%, which is very encouraging. The grid electricity cost per month was quite low, less than Tk 70 (GBP 0.66). We enquired about their alternative cooking arrangement and they informed that they cooked more than 80% of their food using the cooking system. During the breakfast time, they could not afford slow cooking as the family members either go to office or school right after breakfast. Some of the foods like chapati, which required higher temperature was cooked in their conventional cook stoves (gas or firewood).

6.2. Commercial Users

We decided to choose small tea stalls and small restaurants or small food outlets as the commercial user. As we started looking for the tea stalls or small restaurants, our main criteria was to choose a small business where the power consumption would not be very high and they have the option to install the solar PV panels where there is sunshine all day long throughout the year. In Dhaka city, it is not at all difficult to find small tea or food stalls, but most of them do not have the option to install solar PV. In most of the cases, the roof tops were owned by somebody else and in other cases

sunshine on the roof top was often interrupted by shading from the adjacent taller buildings or trees. In a number of cases, we found that the shop owners were not interested to adopt a new system as they felt that the new system may have unforeseen uncertainties. Additionally, the corona virus pandemic caused additional problem in more vigorous searching for the sites. So, it took us a longer time to find out proper commercial installations. By the time we succeeded in convincing the selected shop owners, it was a bit late due to coronavirus pandemic and the data collection volume was less than the domestic users.

6.2.1. Tea Stall

The tea stalls sell hot tea and snacks in their shops. Snacks were precooked and did not use the cooking facilities in the shop. In each shop, there are two electric kettles used. Kettle no.1 is to keep hot water ready to serve to the customers whenever they come and kettle no.2 is used to heat the tap water to the boiling point as per requirement whenever there is necessity to replenish hot water. So, have arranged kettle no.1 to be used with a hotplate integrated with solar PV as it runs throughout the working hours. Kettle no.2 is run from the grid, but a 45μF capacitor was used in series to drop the voltage so that the power consumed by the 1500W kettle does not exceed 110W as this kettle was used to preheat water for kettle 1. The block diagram of the system designed for the tea stall is shown in Fig.3.

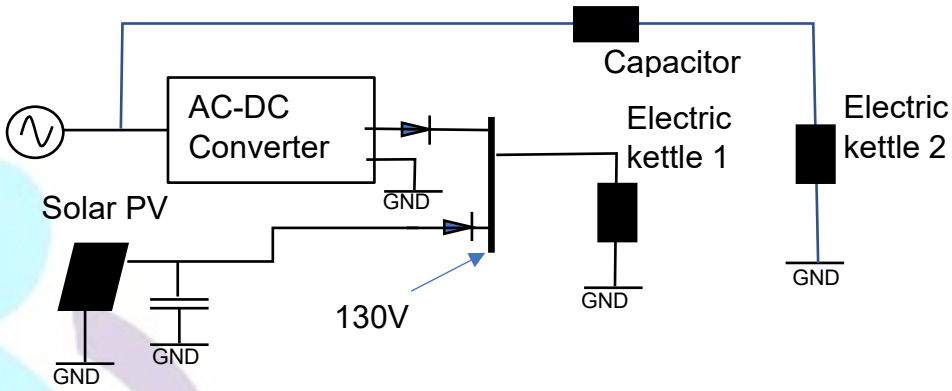

Fig.3. System block diagram for tea stall.

The basic system diagram is similar to the domestic systems components with the exception that no water heater is provided. The water heater was used to utilize the solar output when no cooking was taking place. The tea stalls run from morning till night and there is almost no chance that the solar PV output would remain unutilized.

Electric kettles: All the electric kettles were rated at 220V AC and had power ratings of 1500W and a capacity of 1.8L. They consumed 525W when connected to 130V DC.

System Voltage: The lower operating voltage of the system (130V DC), compared to the grid voltage, has been intentionally chosen (based on the finding of the previous MECS research project) for two reasons.

i. Like the domestic system, to reduce power consumption from the grid. The conventional electric kettle had a power rating of 1500W which consumed 525W when connected to the system.

ii. Higher kettle power, although makes the hot water faster, starts generating steam as soon as the water starts boiling. As the electric kettles are kept ON all the time to serve hot tea for the customers, we estimated that higher power would cause excessive power loss due to steam generation and that would result in higher energy bill.

The Solar Panels: For the domestic system eight 50Wp panel was used to obtain the 400Wp array. The specifications of the solar panels are given below.

Table 7. Specifications of Omera Solar, Multi-crystalline PV panels

Power rating, Wp	No. of cells in series	Open circuit voltage, V	Short circuit current, A	Voltage at MPP, V	Current at MPP, A
50	36	21	3.05	18	2.83

This PV system is chosen same as the PV array for the domestic users. For further details please see 'Solar PV Array' in section 6.1.

Selected Users

Address- Purba Padardiya,Satarkul road, Uttar Badda, Dhaka-2941

Business: Small Tea Stall & snacks

Sale volume: 200 cups of tea/day
Usual Cooking fuel- Cylinder gas

No. of burners used – 2

Cooking energy bill Tk. 2500/month

Md. Razzak
Owner
Age- 30
Education: Class 8

Rahim (nephew)
Managing member
Age- 19
Education: Class 8

Picture of the roof top solar panel

Control panel on the tea stall wall

Address- Uttar Baherchor, Taranagar,Keranigonj,Dhaka. Business: Small tea stall and snacks Sale Volume: 250 cups of tea/day Usual Cooking fuel- Cylinder gas No. of burners used – 2 Cooking energy bill Tk. 2400/month	  Abu Bakar Owner Age:55 Education: None Shahin Hossain(son) Managing member Age:20 Education: class 10
 Picture of the roof top solar panel	 Control panel on the tea stall wall

Feedback from the users after 2 weeks

We monitored the tea stalls and collected energy data every week. After 2 weeks, we discussed with the tea stall owners about their feeling on the solar tea stall. Both the owners complained that the taste of the tea is not as good as before. At the same time they had technical problems with the electric kettles and we found out that the quality of workmanship of the kettles were not good in some of the cases. Whenever there was a technical problem, we immediately tried to address it and in appropriate cases we replaced the kettle. So, far as the taste of the tea is concerned, it was rather a challenge for us to find out why they are complaining about this. Later we realized that the tea stall owners used to use an aluminium kettle on their gas stove and they had the right idea about the amount of tea leaf they need to use and how long they need to boil the water. With the new system and size of the kettle, the amount of tea leaf they need to use and the time they need to boil needed adjustments. So, we guided them on these aspects and they were satisfied with the taste of the tea after proper adjustments. One of the tea stalls chosen was in Keraniganj (Abu Bakar's tea stall) which was about 90 minutes journey from the university and we found it difficult to address his problems promptly. At the same time, he had very frequent complaints (probably he could not handle

the system properly) and we finally agreed with the tea stall owner that the system is not working well. So, we took the system off from his tea stall and chose another tea stall (Basir's tea stall) near our university. This time we did not have much problem with the system and it ran smoothly.

When first started with hotplates and we found that there was a number of problems related to the hotplate based tea making. First, the aluminium kettle had a capacity of 5L and it took almost 1hr and 15 minutes for the water to boil. It was too long a time for the tea stall owner and they expressed their dissatisfaction. The power consumption was also high as hot plates are less efficient. So, we decided to change the hotplate by insulated electric kettles as mentioned above. But after looking at the collected data for the next 2 weeks we realized that the daily average energy consumption was still quite high and the cost of electricity would be similar to the cost of a gas cylinder based tea making. We studied the system more closely and found that the electric kettles were generating significant steam after they reached boiling condition. So, we modified the system, and the block diagram is shown in the figure below.

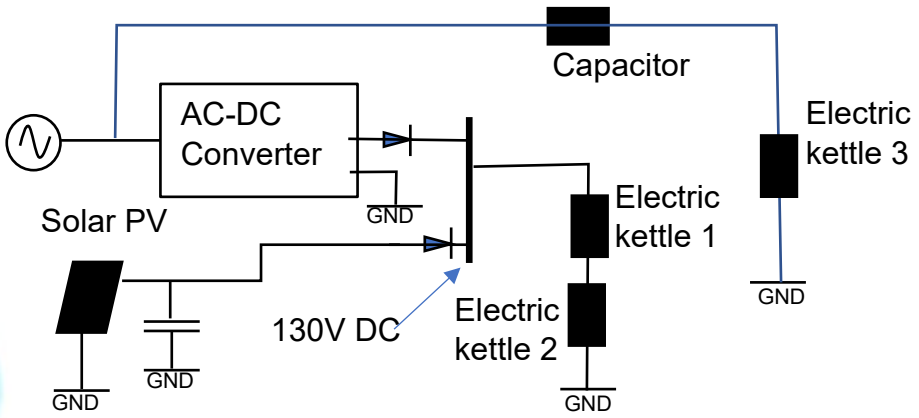

Fig.4. Modified circuit arrangement for the tea stalls with three electric kettles.

In the new arrangement two electric kettles were connected in series so that each of them was consuming 130W (a total of 260W, compared to 530W in the earlier arrangement) when connected to the system. This power was just enough to keep the water temperature at 100°C without generating too much steam. But it took them a much longer time for the water to reach the boiling temperature. To get around the problem, we changed the capacitor on the AC line to 55μF and replaced the old kettle (kettle 3) with a new one with a power rating of 1000W, so that it consumed 155W when connected to the power outlet 2 of the control circuit. Kettle 3 was only used to preheat water when the water in the kettles 1 or 2 required replenishment. This way we reduced the power consumption by almost 50%.

A new site for tea stall

As already mentioned, Abdul Bakar was not happy with the system due to too much technical problem and his lack of understanding with the system. So, we took off the system from his place and connected to Basir's tea stall near the university. Details of Basir's tea stall is given in the table below.

Address- Satarkul Road, Uttar Badda, Dhaka-2941 Business: Small Tea Stall & snacks Sale volume: 200 cups of tea/day Usual Cooking fuel- Cylinder gas No. of burners used – 2 Cooking energy bill Tk. 2500/month	 Md. Basir (Owner) Age- 32 Education: Class 8
 Picture of the roof top solar panel	 Control panel on the tea stall wall

Energy data from the tea stalls

In the table below, the energy consumption data of the two tea stalls are given. The data of Abdul Bakar's tea stall (which was discontinued) is not included as the data size was too small to be useful for our analysis.

Table 8. Cooking energy data for the tea stalls

Name	Time of data collection, weeks	Total energy/week	% grid	%PV	Grid electricity bill/month, BDT
Md. Razzak	18	33.2	83.4	16.6	1424.00
Md. Basir	10	31.47	73.5	26.5	1190.00

The electricity tariff for commercial users was much higher and the average per unit cost was BDT 12. So, the grid electricity cost, in the table above, is calculated with BDT 12 per unit. The variation in the percentage share of the solar energy is quite significant between the two users. On investigation we found out that the solar panels of the Razzak's is placed at a location which is not very easily accessible. So, Razzak cleaned the panels less frequently. But his shop is on a major road and there was high dust sedimentation on the panels. We advised him to clean it more frequently, at least twice a week, to get a better solar PV output. As the table presents the average data, the weeks of lower PV output is also included in it and that reduced his average solar PV share. We checked percentage solar share for the weeks after he started more frequent cleaning, the values were close to Basir's solar panel (24%). Additionally, weather in mid December to mid January was foggy and it affected his average solar PV output. As Basir's shop was installed in mid January (after we discontinued with Abu Bakar), he did not face the bad weather and his average PV share was higher.

6.2.2. Small Restaurant

Suruz, the owner of a small restaurant, mainly caters the day labourers working in the construction site near the restaurant. He provides breakfast, lunch and dinner for the customers. The breakfast is usually paratha (wheat flour based bread), mixed vegetable, dal (lentil soup) and egg. In the lunch and dinner, he serves rice, dal, mixed vegetable, meat and fish curry. Considering the power level of the electric cooking appliances, we realized that he would need to use the cylinder gas for frying and cooking food items like chapati or paratha. So, it was expected that he will reduce the gas consumption but cannot altogether get rid of the gas cylinders. We chose the site as its expected energy consumption was not too high and the roof top gets unabated sunshine. The design of the system was such that the system output voltage varied automatically (above 130V) to adjust for the maximum power delivery to the cooking appliance. As for example, if the solar power generated at the panel array is higher than the power consumed by the appliance at the rated 130V DC, the system voltage increased slightly, like 145V, to increase the power consumption so that the solar energy is not wasted. It is to be mentioned here that all the appliances used were rated at 220V AC and had a power rating much higher than 500W. Under usual voltage condition, the appliance consumes one third of its rated power. So, the appliance power never exceeds its rated power when it is operating at a voltage slightly higher than 130V. As the power requirement was expected to be higher in the restaurant, we installed 800Wp PV panels and connected two AC-DC converters in parallel to get a maximum power delivery capacity to be 1200W. However, we did not expect more than 1000W in the system with appliances that we provided.

System Block Diagram

The small restaurant chosen was basically serving a maximum of 7-8 persons at a time. Considering heavier cooking load, we decided to connect 800Wp panel for the system and two power outlets were provided so that the owner could cook two items at a time. The block diagram of the system is shown in Fig.5. It was suggested to the shop owner that whenever both the power outlets are not in use, one of the power outlets can be used for hot water which can later be used while cooking the next food item.

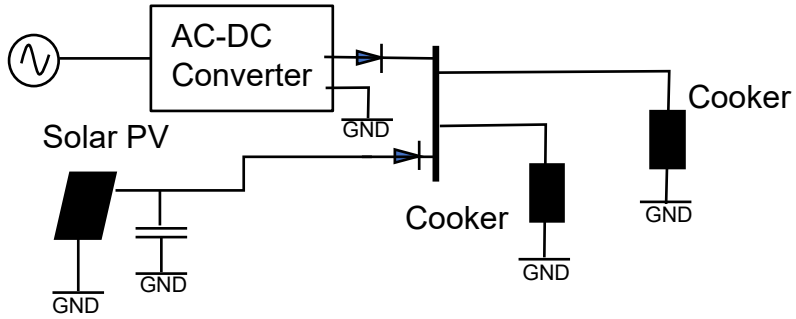

Fig.5. System block diagram for the small restaurant.

Solar PV Array

In case of the small restaurant, the initial data obtained from the restaurant owner indicated that the power requirement will be higher and we decided to install eight 100W panels to have a total peak power of 800W for the array. The specification of the 100W panels are given below.

Table 9. Solar PV specifications for the restaurant

Power rating, Wp	No. of cells in series	Open circuit voltage, V	Short circuit current, A	Voltage at MPP, V	Current at MPP, A
100	36	21	6.15	18	5.6

Other specifications are same as described in 'Solar PV Array' in section 6.1.

Cooking Appliances used

Cooking appliances used were:

Rice cooker 4.6L, rated at 220V AC, 1600W

Electric pressure cooker, 5L, rated at 220V AC, 900W

Power consumed when connected to the system:
Rice cooker 560W and Electric pressure cooker 315W

Selected Restaurant Owner

Details of the restaurant owner Suruz is given in the table below.

Address- Beraid (near Balu river) Satarkul, Dhaka Business: Small restaurant Sale Volume: 50-60 persons/day Usual Cooking fuel- Cylinder gas No. of burners used – 2 Cooking energy bill Tk. 12,000/month	 Suruz Age:30 Education: Secondary school
 Picture of the solar panel	 Control panel on the restaurant wall

Collected Cooking Energy Data of the Restaurant

Table 10. Cooking energy data for the restaurant

Name	Time of data collection, weeks	Average energy, kWh/week	% grid	%PV	Grid electricity bill/month, BDT
Suruz	7	16.34	44.3	55.7	372.30

As already mentioned, energy tariff for the commercial consumers was BDT 12 per unit and the cost calculation for grid electricity cost, presented in the table uses this value. He cooked lunch and dinner for 15-20 people and his energy consumption from electric cooking was quite low. Other than rice, he cooked all other foods in pressure cooker that save him from high energy consumption. It is an interesting observation that adopting efficient cooking system can reduce the cooking energy by a significant margin. The percentage share of the solar PV could even be higher, if there was not the severe dust problem. As the restaurant is close to a construction site, there was high rate of dust deposition on the panels and we suggested him to clean the panels every day.

7. Quality of the Appliances Used

The cooking appliances used in the project was mainly locally manufactured. This was done for the sake of warranty and easy maintenance. Although the duration of the project was not very long, we still faced some technical problem from the appliances. Two of the multicookers used in the households malfunctioned and we replaced them immediately. We later identified that thermostat contact was the main problem. The curry cookers performed well and we faced no problem with the curry cooker performance. So far the electric kettles of the tea stalls are concerned, we found them to be very badly designed for long hour usage every day. The kettles had a base where the electric connection was provided such that the electric contact is disconnected as soon as the kettle is lifted from the base. So, the physical contact between the kettle heater element and the supplied power was via a thin metal plate which acted like a plug and socket arrangement. After using for a while, we found that the electrical contact was not securely established and excessive heat was generated at the contacts. So, the base of the electric kettles were over heated and in a number of cases were burnt beyond repair. As the base become excessively heated, actual heat delivered to the water inside the kettle was less and the water failed to reach the boiling temperature. Within our short span of the project, we had to replace 4 of the electric kettles, that we feel is too high. We feel that the manufacturers should be appraised of this design defect to improve the performance of electric kettles. The electric pressure cooker in the restaurant performed satisfactorily and the user had no complain about it.

8. General Feedback from the users at the end of the project

The general feedback from the users were positive and they showed interest in continuing the system after the project is complete, except for one of the domestic user Jahir. In general, this is not an unexpected feedback as they did not have to pay for the system costs. When asked about their opinion about installing the system at their own cost, they wanted to know the cost of the system. When we told them about the estimated cost of the system, they figured out their savings per month and agreed that it should be financially viable for them. Regarding the mode of payment, they were in favour of instalments. Almost all the users, except a domestic user, used gas cylinders and did not have the issue of smoke in the kitchen. However, they are of the opinion that they are more comfortable with electric cooking as heat generated from the burners in gas cookers creates an uncomfortable ambience in the kitchen.

Domestic user Jahir is of the opinion that the overall system is inconvenient as they have to maintain other cooking systems as well. They feel that the cost saving does not compensate enough for the inconvenience they had to endure. Considering the good aspects of the electric cooking system, they will be happy to buy one if they do not have to rely on other cooking systems at the same time.

9. Financial Analysis Based on the Collected Data and Possible Business Model

As already presented in the Tables 5, 8 and 10, we found that the actual energy consumption from the grid was quite low to make the cooking system a low energy one. But low energy consumption from the grid has a hidden cost and that is the cost of the PV installation, control system and the cooking appliances. So, a detailed financial analysis is important to have clear picture of the real cost of the system both money wise and energy wise. Table below shows the total picture of the cooking energy consumption before and after adoption of the proposed cooking system and the

corresponding cost components. It is worth mentioning here that many of the users kept their old system as a backup and used them from time to time. So, the use of alternative fuel for cooking is also presented in the tables below.

Table 11. Cooking energy cost of the domestic users.

	Before adopting electric cooking	After adopting electric cooking		
Name (data collection time, 18 weeks)	Cooking energy cost , BDT	Grid electricity cost, BDT	Other fuel used along with electricity, BDT	Cost saving/month, BDT
Md. Sadek Hossain	1000	19.48	200 (0.2 cylinder)	781.52
Md. Jahir Hasan	1625	67.66	705 (0.33 cylinder + 50kg firewood)	852.34
Md. Aslam Hossain	1500	63.33	500 (0.5 cylinder)	936.67

In our financial analysis, we did not attempt to calculate the levelized cost of the PV energy as the PV energy was never utilized 100% by the users. So, took a different approach to look at the financial attractiveness of the proposed system from the user perspective. Our hardware cost estimations are given below.

400Wp solar PV + installation and frame: BDT 18,000
Estimated Control circuit + wiring: BDT 4,000
Cooking appliance: BDT 5,000
Total = BDT 27,000

Some of the costs like the cost of the control circuit should come down close to BDT 3500 when large scale production of the system is considered. From the table we can safely assume that the average cost saving is BDT 750 per month and that will give payback period of 3 years. If the consumers can save BDT 750 per month, they will not hesitate to give a monthly instalment of BDT 750 and that is the basis of our calculation.

If we now look at the financial data of the tea stalls, as presented in Table 12, we will see a very similar picture.

Table 12. Cooking energy cost for the tea stall owners

	Before electric cooking	After electric cooking			
Name (data collection time)	Fuel cost , BDT	Total energy/week	Grid electricity bill/month, BDT	Cost of other fuel	Monthly Cost saving

				used, BDT	
Razzak (18 weeks)	2500	33.2	1424.00	0	1076.00
Basir (10 weeks)	2500	31.47	1190.00	500 (0.5 cylinder)	810.00

Electricity cost/kWh is BDT 12.00 per unit
Cost of 400Wp of PV + installation = BDT 18,000
Control circuit + wiring = BDT 4,000
Electric kettle = BDT 3,000
Total = BDT 25,000

With an average monthly saving of BDT 800/month, we assume a monthly instalment of BDT 800 and the payback period will be less than 3 years.

Although the time span over which the restaurant collected its data was not long, still we can get some idea about the cooking energy costs.

Table 13. Cooking energy cost of the restaurant

	Before electric cooking	After electric cooking			
Name (data collection time)	Fuel cost, BDT	Total energy, kWh/week	Grid electricity bill/month, BDT	Other fuel used	Cost saving
Suruz (7 weeks)	12,000 (4+ large cylinders)	16.34	372.30	9450 (cylinder gas)	2177.7

In case of the restaurant, we used higher capacity of the PV system for higher power output and the corresponding capital cost was also higher. At the same time, the cost of electricity is also high (BDT 12/unit) for the commercial users.

Cost of 800Wp PV + installation = BDT 34,000
Control circuit + wiring = BDT 7,000
Cooking appliances (electric pressure cooker + rice cooker) = BDT 10,000
Total cost = BDT 51,000

At an average saving of Tk. 2000 per month, the payback period is less than 2.5 years.

So, it is apparent from the tables that the payback period would be close to 3 years for all types of users. If we look at the tea stalls, we find that the choice of the solar panel (400Wp) should have been higher so that the PV percentage could be higher to reduce the grid electricity cost. It is our understanding that a proper business model can be attractive to the users as they can be made to realize the benefits of the solar PV integrated slow cooking system.

Possible Business Model

Feedback from the users, although very limited, predominantly shows the importance of a proper business model as they prefer payment by instalments. Micro-financing infrastructure is well developed in Bangladesh and there are a number of organizations who work at the grass root level. So, adopting microfinancing does not seem to be major challenge. If we look at the cost of the systems packages, they range from BDT 25,000 to BDT 45,000 which is not a small amount by Bangladeshi Standard. Organizations like Grameen Shakti, BRAC or IDCOL has the proper background and institutional set up for the dissemination of such systems. So far the manufacturing or assembling of the systems are concerned, we utilized the manufacturing facilities of our partner PowerCom. Some components of the control circuit were imported and rest were assembled locally, which indicates the importance of involvement of a local manufacturer. However, dissemination through the micro-finance organizations will increase the cost of the systems and some kind of financial subsidy may be helpful in the initial stage for rapid uptake of the systems in the rural and per-urban areas.

10. Prospect and challenges in field level implementation of the project in the context of Bangladesh

The field data collected from the limited domestic and commercial users indicates that most of the users are happy with the system. If we consider the prevailing kitchen conditions in Bangladesh, rural people mostly use firewood and only limited number have the access to gas cylinder. So, the kitchen environment is usually unhealthy and uncomfortable. If the affordability can be ensured, rural people should take interest in adopting the system. Bangladesh power system has expanded rapidly in the last 4/5 years and now more than 90% of the households have access to electricity. So, electric cooking is expected to take off, if the cost is comparable to their existing cooking energy cost and reliability of the power supply (less frequent load shedding) is within tolerable limits (the tolerable limit varies with individuals but in general it is considered tolerable if the duration of the load shedding does not exceed more than an hour during the cooking time). The project data indicate that the percentage share of the solar PV electricity can be as high as 60%, if the system design is appropriate. The usual electricity tariff for the domestic users, who do not consume more than 200 units a month, is quite low and electric cooking will be cost effective. If the domestic users choose electric cooking, the question that arises whether they will use the grid electricity only or they would like to have a solar PV integrated cooking system. In the MECS funded cooking diary project [2] it was observed that the electricity bill for cooking will be approximately 25% less compared to the conventional firewood-based cooking. However, in the grid-based cooking the user had the option to use the full power of the cooking appliance and in most of the cases full power option is less efficient. In this project, the maximum power consumed by the appliances are reduced to less than 500W and this makes the cooking efficiency higher. So, adopting the solar PV integrated electric cooking will reduce their expenses by more than 50% in comparison to the biomass or gas cylinder based cooking, which should be an important issue to highlight to the users to convince them. However, low power means slower cooking and there is a question of slight change in habit. Our project data indicate that the users take about 2/3 weeks to get adjusted to the new system but very soon realize the positive aspect of the solar PV integrated cooking.

The cost of electricity is much higher for the commercial users, but still the project data shows a very encouraging cost saving for the commercial users when they adopt solar PV integrated electric

cooking. However, change in habit to adapt with the slow cooking is more challenging for the commercial users. But once they get used to it, they find it economically attractive.

Dust accumulation on the solar panels is a challenge and in the peri-urban areas we may need to clean the panels twice a week. Sometimes, the PV panels at the roof top are not easily accessible and regular cleaning of the panels can be bothersome.

Some of the policy makers have the feeling that cooking by electricity, if it becomes widely popular, may overload the power system. It is important to make them realize that in case of solar PV based cooking, the actual power from the grid is so low that there is almost no chance of getting the power system overloaded by the cooking appliances. Presently, Bangladesh has surplus electricity and if the consumption does not increase rapidly, the power system will face serious financial problem. So, encouraging PV integrated electric cooking could be an answer to the problem without making the power distribution system overloaded.

The quality of the cooking appliances is an issue of concern, as we found that quality control of the products is not up to the mark. This message should be disseminated to the manufacturers and at the same time policy level intervention will be needed to grade the cooking appliances (like 3, 4 or 5 star products) so that the users will know about the quality of the products at the time of purchasing.

Building awareness amongst the prospective users and development of technical manpower is also important for successful dissemination of the electric cooking technology. So, awareness building marketing strategy and technical training on the repair and maintenance of the cooking appliances should be considered.

As most of the people in the rural community may find it difficult to purchase the system by upfront payment, microfinancing will be of utmost importance for market penetration. Microfinance organizations are quite deep rooted in the rural areas and adopting a proper business model for the purchase of electric cooking appliances should not be a very difficult task. Infrastructure Development Company Limited (IDCOL), an govt. owned limited company, had been very successful in disseminating Solar Home Systems (they run the largest Solar Home System program in the world) and their experience and business model can be utilized in this respect.

11. Impact of COVID-19 on the Progress of the Project

Due to COVID-19 pandemic, the country was under lockdown from mid-March till end of July, 2020. So far, the COVID-19 data published by the govt.(https://corona.gov.bd/), June had the worst rate of infection and highest death rates. Due to lockdown, almost all small businesses were closed down and many of the city dwellers left Dhaka for their home districts outside Dhaka. So, any data collection effort during this period would have been futile. The regular activities gradually started from July but the educational institutions still remained closed and we faced difficulties in involving the enumerators to go to different sites for data collection. It was also of concern that the enumerators might get COVID-19 infection while on their duties. So, we decided to go slow in the months of July and August and limited our surveying to the areas around the university. We also interviewed some of our employees who live in the peri-urban areas to explore the possibility of selecting them as our users. We also requested them to look for commercial users in their areas and provide their feedback regarding the reliability of the commercial shop owners. In this process, we selected two of our drivers. As per their suggestion, we also selected a commercial tea stall. The

other household and the tea stall were selected in the areas close to the university. The third commercial user could not be selected, as we are trying to find a small restaurant or food outlet. We faced significant difficulty in choosing a food outlet for two main reasons. First, most of them require much higher power (more than 1500W) and second, their roofs were not suitable for the installation of the PV panels due to shading. In peri-urban areas, getting proper sunshine on the roof mounted solar PV is a challenge, as the buildings are quite close to each other and some of the buildings cast their shadows on the smaller buildings. In rural areas such problems would not have existed as there are few multi-storied buildings. We still kept on searching for a food outlet and hope to get a suitable one in time it was a bit late by the time we could choose a small restaurant for our project.

In the project, some of the components were needed to be imported from China and the order was placed in August. Some of the components like the DC energy meters were purchased off the shelf, but the AC-DC converter (called LED drivers) were custom made, as the output voltage we needed (130V) was not a conventional one. The pandemic situation caused worldwide soaring demand for COVID-19 related products like face masks, oxygen generators, had gloves, hand sanitizers, pulse oxy-meters etc. and the Chinese suppliers/exporters gave preference to those bulk purchasers compared to our small ordered quantity. PowerCom, our partner in the project, played a very positive role in getting the products imported from China and fabricating the control circuits by assembling the required components. The supply date was shifted three times and we finally got our products from China in early October 2020. So, the whole installation process of the cooking system was delayed, but finally we did overcome the problem.

As far as the purchase of solar PV panels are concerned, due to closing down of the local factories and deferred supply of the imported raw materials, availability of the small sized solar panels (50Wp) was adversely affected. When we contacted a number of local solar PV manufacturers, almost all of them informed that their factory was effectively closed and they did not have the panels in their stock. Finally, Omera Solar, a local solar PV manufacturer, gave the commitment to supply us with the panels by the end of September 2020.

12. Conclusions

If look at the Tables 11,12 and 13, we find that the energy cost of electric cooking is quite low, by any standard. The domestic users cook for a limited period of time 2-3 hours every day and full utilization of the solar PV energy was never achieved. But still the cost of cooking was so low that it is possible for the domestic users to payback the system cost within 3 years. In case of the tea stalls the actual share of the solar PV in the total consumed energy is not very high (less than 25%). It indicates that we should have chosen a larger size of the solar PV array so that the PV share could become higher. However, it is to be kept in mind that the tea stalls run from very early morning (when there is limited sunshine) to the night hours (3/4 hours after sunset) when they have to rely on the grid power for a significant percentage of time. So, we do not expect the solar PV share in the tea stalls to go as high as the domestic users. The small restaurant also shows high percentage of solar PV share in the total electricity consumption, as the electric cooking was done during the day hours and the cooking of the dinner items were complete hours before sunset. Additionally, the restaurant owner used the rice cooker to make hot water for the food items cooked in the gas burners (when food was not cooked in the electric cooking system) that increased the PV percentage in the total electricity consumption. So, the correct system design and proper using of the system can make a difference in the energy consumption pattern from the grid electricity. However, in all the cases, we found that the payback time of the system cost from the cost saving was less than 3

years. As already discussed, frying and baking is not convenient in the proposed low powered cooking system and the user may have to keep an alternative cooking system like gas cylinder and/or firewood. As our data shows, it is not convenient for some people to maintain more than one cooking system. However, the percentage of such people would not be very high in the peri-urban or rural population, as access to gas cylinder is limited and firewood based cooking has much more inconveniences compared to the electric cooking systems.

From the feedback of the users, we see that there is an issue of change in habit as the users initially faced some difficulty in using the electrical appliances, particularly due their low power. For most of the users, they overcome the problem very easily and the final comments show their interest in the system for three main reasons –

i) The cost saving compared to the conventional cooking fuel,
ii) Less attention is needed while food is being cooked, and
iii) Kitchen environment is more comfortable as extra heat generation is very low.

So, it is our opinion that a solar PV integrated cooking system can be made popular in the peri-urban and rural areas if a proper business model is developed so that the instalments put minimum financial pressure on them. The urban areas may not be a very good choice for such a project, as getting shade free roof top is difficult due to high density of the rural buildings (placed very close to one another) and at the same time rural roof tops have alternative usages (like drying clothes in the sun and roof top gardens).

13. Acknowledgment

The author would like to acknowledge the help and support from the Research Associates Rehan Masoom and Jahirul Islam and Research Assistants Shahal Ibn Islam Joy, Md. Ariful Islam and Abdullah Al Mojib. The author is also grateful to the UIU authority for extending full support for the project. Above all, the author is grateful to MECS and EnDev for their financial support of the project.

14. References

[1] MECS-TRIID report ‘A solar PV based low cost inverterless grid integrated cooking solution’, February 2020.

[2] MECS report ‘eCook Bangladesh: Cooking Diary’, March 2021.

Appendix A1

INTERVIEW QUESTIONNAIRE FOR CLEAN COOKING PROJECT

SURVEYOR ASSESSMENT

Address: Satarkul, Badda, Dhaka		
Village/police station: Badda	Upazilla/District: Dhaka	
General law and order of the locality:	Lat/Long:	
Type of installation	A. DOMESTIC [__yes__]	B. COMMERCIAL [____]
Possibility install 400Wp solar PV on the roof top (1.5mx3m)	A. Positive B. Negative C. Not sure	
Assessment of the owner's Interests	A. Positive B. Negative C. Not sure	

A. BACKGROUND OF THE RESPONDENTS

1. Name: Md Sadek Hossain			
2. Gender: A. Male B. Female	3. Age: A. Young Adult B. Middle Adult C. Late Adult		
4. Category: A. Main bread earner	B. Main Cook	C. Both	D. None
5. Total Family Member: 4	6. School Going Children: A. Yes B. No		
7. Education (Last Degree): SSC	8. Occupation: Tea stall Owner		
9. Total Monthly income (Approx.): BDT 15,000	10. Total Monthly Electricity Bill (Approx.): 650-700		
11. Total Monthly Fuel-cost (Approx.):BDT 2500	12. Affordability of Fuel-cost (Approx.):		

B. COOKING CONDTION BEFORE ADOPTING ELECTRIC COOKING

13. Who cooks	A. Family Member-wife	B. Others
14. Type of cooking pots	A. Conventional pots	B. Induction cooker usable
15. Energy source for cooking	A. Gas (i) Cylinder (II) Other B. Wood C. Coal D. Electricity	
16 Usage of Electric Rice Cooker: A Yes B. No	Usage of Pressure Cooker: A Yes B. No	
17. Knowledge of another electric cooker	Rice Cooker	if yes than: Level of Usage: A. Regular B. Sometimes C. never
18. If not using electric cooker	WHY: A. cost B. Fear C. Dissatisfied Taste D. Did not know F. Others_____	
19. Number of burners for cooking	1 gas	
20. Time spend for cooking	1.5-2 hours	

21. Cooking for how many people	4

C. Level of Interest in Fireless & Heat-less (Clean) Cooking without offering low-cost solution

(This part must be filled in in consultation with the person who physically cooks in the kitchen)

What difficulties are faced with cookers?	Heat (yes)	Smoke (no)	carbon particles ( )	pot cleaning ( )	Others ( )
Do you have any health problem related to kitchen usage?	Respiratory (no)		Visibility (no)	Others ()	
How much spent for medicine every month?	N/A				

Data Collection after using the electric cooking system

1. Name: Md Sadek Hossain Type of user: Domestic/Tea stall/ restaurant
2. Do you like the electric cooking system? Yes
3. What is the difficulty with the system: Cooking is slow (Yes); It takes more time (yes); Frying is difficult (somehow)

   Other:
4. How can it be improved? N/A
5. What do you do when the food is being cooked: Household work, gossiping,
6. Will you continue with the system after the project is over: yes/no

   Why:
7. The system cost is BDT 27,000 Domestic
   BDT 25,000 Tea stall
   BDT 45,000 Restaurant

   Your monthly electricity bill was = BDT 20 and monthly saving was BDT 782.

   Would you like to buy a system: yes/no

   Why: Easy cooking, save money

   If the answer is yes,

   Would you like to buy a system by full cash payment: yes/no (If installment available, I'll go for it)

   Would you like to buy using monthly instalment: yes/no

   How much per month are you prepared to pay: BDT 2,000-3,000

8. Do your neighbors/friends/ others enquire about your new system? Yes/no
   Are they interested to adopt such a cooking system? Yes/no

To be filled up after using electric cooking appliances

Did you like electric cooking in comparison to your earlier cooking appliance?	yes/No	
If yes, what are the advantages? (you may choose more than one)	○ Clean ○ No smoke ○ No excessive heat ○ Easy cleaning of cooking pans ○ No health issue ○ Not to worry for stocking dry wood ○ Cooking can be done inside the house ○ Spare time for other household activities ○ Requires less attention while cooking ○ Other: Previously I had to wake up very early in the morning and start cooking food. Now as electric cooking requires less time and attention, I am a bit more relaxed	
What are the disadvantages (you may choose more than one)	○ Takes longer time to cook ○ Cooking some types of food is difficult ○ Electricity bill may be high ○ Power failure is a problem ○ Other:	
Did the appliance change the way you cook? If so, how?	It requires less attention while cooking.	
Have the responsibilities for preparing food changed at all with the new appliances? For example, do other members of the family now cook more often?	Both husband and wife cooks.	
Have you learned any new tips/techniques to help you cook with these appliances? If so, how did you learn them?	N/A	
Were there foods/dishes you found easy (or enjoyable) to cook in the appliance?	Vegetable,	
Were there foods/dishes you struggled to, or could not,	N/A	

cook using the appliance? If so, which?	
Do you think you will use electricity for cooking after the project is over?	Partial/full, Why: Low electricity cost, easy system
Would you recommend any of the appliances? Which ones? Why?	Rice cooker, curry cooker both are useful.
Have your neighbors/friends/family shown interest in acquiring these appliances?	Yes
Do you feel that electric cooking requires less attention and you get some spare time?	Yes/No If yes how do you plan to use that time: Household work
Who is responsible for paying the electricity bill?	Myself
Who is responsible for decisions around cooking fuel?	Myself
Who is responsible for decisions around cooking appliances?	Both
Do you experience power outages at all? - If so, how often? And how long do the outages last?	1-2 time in a month.
Do outages affect cooking with electrical appliances? yes If yes, how do you cook?	Use gas
Have you had any of electric cooking appliances breakdown or fail?	Yes
If so, what was the problem?	Wiring/Human error/Electrical /Poor quality/durability/Wear and tear

How did you attempt to solve the problem?	I have called Ariful Islam (RA).
If something went wrong, is there someone in the area that you know who fixes electrical appliances?	Yes
Has this experience affected your mindset with regards to buying future electric cooking appliances? If so, how?	No
Are there any other observations you would like to make?	N/A
Would you be interested in being involved in another cooking study?	Yes

Appendix A2

INTERVIEW QUESTIONNAIRE FOR CLEAN COOKING PROJECT

SURVEYOR ASSESSMENT

Address: Vill: Uttar bayer char, PO: Tara nagar		
Village/police station: keraniganj	Upazilla/District: Dhaka	
General law and order of the locality:	Lat/Long:	
Type of installation	A. DOMESTIC [__Yes__]	B. COMMERCIAL [____]
Possibility install 400Wp solar PV on the roof top (1.5mx3m)	A. Positive B. Negative C. Not sure	
Assessment of the owner's Interests	A. Positive B. Negative C. Not sure	

A. BACKGROUND OF THE RESPONDENTS

1. Name: Md. Jahir Hossain			
2. Gender: A. Male B. Female	3. Age: A. Young Adult B. Middle Adult C. Late Adult		
4. Category: A. Main bread earner	B. Main Cook	C. Both	D. None
5. Total Family Member: 6	6. School Going Children: A. Yes B. No		
7. Education (Last Degree): Class 8	8. Occupation: Driver		
9. Total Monthly income (Approx.): 20,000 BDT	10. Total Monthly Electricity Bill (Approx.): 1000-1200		
11. Total Monthly Fuel-cost (Approx.): BDT 1600	12. Affordability of Fuel-cost (Approx.):		

B. COOKING CONDTION BEFORE ADOPTING ELECTRIC COOKING

13. Who cooks	A. Family Member-wife	B. Others
14. Type of cooking pots	A. Conventional pots	B. Induction cooker usable
15. Energy source for cooking	A. Gas (i) Cylinder (II) Other B. Wood C. Coal D. Electricity	
16 Usage of Electric Rice Cooker: A Yes B. No	Usage of Pressure Cooker: A Yes B. No	
17. Knowledge of another electric cooker		if yes than: Level of Usage: A. Regular B. Sometimes C. never
18. If not using electric cooker	WHY: A. cost B. Fear C. Dissatisfied Taste D. Did not know F. Others_____	
19. Number of burners for cooking	1 gas, 2 wood	
20. Time spend for cooking	1.5-2 hours	
21. Cooking for how many people	6	

C. Level of Interest in Fireless & Heat-less (Clean) Cooking without offering low-cost solution

(This part must be filled in in consultation with the person who physically cooks in the kitchen)

What difficulties are faced with cookers?	Heat (Yes)	Smoke (Yes)	carbon particles ()	pot cleaning ()	Others ()
Do you have any health problem related to kitchen usage?	Respiratory (No)		Visibility (No)	Others ()	
How much spent for medicine every month?	N/A				

Data Collection after using the electric cooking system

1. Name: Md. Jahir Hossain Type of user: Domestic/Tea stall/ restaurant
2. Do you like the electric cooking system? Somehow Yes
3. What is the difficulty with the system: Cooking is slow (Yes); It takes more time (Yes); Frying is difficult (Yes)

   Other:
4. How can it be improved?
5. What do you do when the food is being cooked: Household Activity.
6. Will you continue with the system after the project is over: yes/no

   Why: I get it for free so I will use it.
7. The system cost is BDT 27,000 Domestic
   BDT 25,000 Tea stall
   BDT 45,000 Restaurant

   Your monthly electricity bill was = BDT 64 and monthly saving was BDT 937

   Would you like to buy a system: yes/no?

   Why: It is inconvenient as I have to maintain wood stove and gas stove. Any cooking solution that can get rid of other cooking system will be fine.

   If the answer is yes,

   Would you like to buy a system by full cash payment: yes/no

   Would you like to buy using monthly instalment: yes/no

   How much per month are you prepared to pay: BDT
8. Do your neighbors/friends/ others enquire about your new system? Yes/no
   Are they interested to adopt such a cooking system? Yes/no

To be filled up after using electric cooking appliances

Did you like electric cooking in comparison to your earlier cooking appliance?	yes/No	
If yes, what are the advantages? (you may choose more than one)	○ Clean ○ No smoke ○ No excessive heat ○ Easy cleaning of cooking pans ○ No health issue ○ Not to worry for stocking dry wood ○ Cooking can be done inside the house ○ Spare time for other household activities ○ Requires less attention while cooking ○ Other: Previously I had to wake up very early in the morning and start cooking food. Now as electric cooking requires less time and attention, I am a bit more relaxed	
What are the disadvantages (you may choose more than one)	○ Takes longer time to cook ○ Cooking some types of food is difficult ○ Electricity bill may be high ○ Power failure is a problem ○ Other:	
Did the appliance change the way you cook? If so, how?	No	
Have the responsibilities for preparing food changed at all with the new appliances? For example, do other members of the family now cook more often?	No	
Have you learned any new tips/techniques to help you cook with these appliances? If so, how did you learn them?	N/A	
Were there foods/dishes you found easy (or enjoyable) to cook in the appliance?	Rice.	
Were there foods/dishes you struggled to, or could not, cook using the appliance? If so, which?	I could not make Fish fry, Noodles, Fry Vegetable, Chapati.	

Do you think you will use electricity for cooking after the project is over?	Partial/full, Why: I get it for free so I will use it.
Would you recommend any of the appliances? Which ones? Why?	Pressure cooker (Less time and auto cooking) Rice cooker
Have your neighbors/friends/family shown interest in acquiring these appliances?	Yes.
Do you feel that electric cooking requires less attention and you get some spare time?	Yes/No If yes how do you plan to use that time: Household work
Who is responsible for paying the electricity bill?	Myself
Who is responsible for decisions around cooking fuel?	Myself
Who is responsible for decisions around cooking appliances?	Both.
Do you experience power outages at all? - If so, how often? And how long do the outages last?	No.
Do outages affect cooking with electrical appliances? yes If yes, how do you cook?	N/A
Have you had any of electric cooking appliances breakdown or fail?	No
If so, what was the problem?	Wiring/Human error/Electrical /Poor quality/durability/Wear and tear
How did you attempt to solve the problem?	N/A

If something went wrong, is there someone in the area that you know who fixes electrical appliances?	Yes
Has this experience affected your mindset with regards to buying future electric cooking appliances? If so, how?	N/A
Are there any other observations you would like to make?	Backup system, Food Fry system, Chapati making.
Would you be interested in being involved in another cooking study?	Yes.

Appendix A3

INTERVIEW QUESTIONNAIRE FOR CLEAN COOKING PROJECT

SURVEYOR ASSESSMENT

Address: Vill: Uttar bayer char, PO: Tara nagar		
Village/police station: keraniganj	Upazilla/District: Dhaka	
General law and order of the locality:	Lat/Long:	
Type of installation	A. DOMESTIC [__Yes__]	B. COMMERCIAL [____]
Possibility install 400Wp solar PV on the roof top (1.5mx3m)	A. Positive B. Negative C. Not sure	
Assessment of the owner's Interests	A. Positive B. Negative C. Not sure	

A. BACKGROUND OF THE RESPONDENTS

1. Name: Md. Aslam Hossain			
2. Gender: A. Male B. Female	3. Age: A. Young Adult B. Middle Adult C. Late Adult		
4. Category: A. Main bread earner	B. Main Cook	C. Both	D. None
5. Total Family Member: 6	6. School Going Children: A. Yes B. No		
7. Education (Last Degree): Class 8	8. Occupation: Driver		
9. Total Monthly income (Approx.): 28,000 BDT	10. Total Monthly Electricity Bill (Approx.): 1200-1500		
11. Total Monthly Fuel-cost (Approx.): BDT 1500	12. Affordability of Fuel-cost (Approx.):		

B. COOKING CONDTION BEFORE ADOPTING ELECTRIC COOKING

13. Who cooks	A. Family Member-wife	B. Others
14. Type of cooking pots	A. Conventional pots	B. Induction cooker usable
15. Energy source for cooking	A. Gas (i) Cylinder (II) Other B. Wood C. Coal D. Electricity	
16 Usage of Electric Rice Cooker: A Yes B. No	Usage of Pressure Cooker: A Yes B. No	
17. Knowledge of another electric cooker	Rice cooker	if yes than: Level of Usage: A. Regular B. Sometimes C. never
18. If not using electric cooker	WHY: A. cost B. Fear C. Dissatisfied Taste D. Did not know F. Others_____	
19. Number of burners for cooking	2 gas	
20. Time spend for cooking	1-1.5 hours	
21. Cooking for how many people	6	

C. Level of Interest in Fireless & Heat-less (Clean) Cooking without offering low-cost solution

(This part must be filled in in consultation with the person who physically cooks in the kitchen)

What difficulties are faced with cookers?	Heat (yes)	Smoke ()	carbon particles ()	pot cleaning ()	Others ()
Do you have any health problem related to kitchen usage?	Respiratory (No)		Visibility (No)	Others ()	
How much spent for medicine every month?	N/A				

Data Collection after using the electric cooking system

1. Name: Md. Aslam Hossain Type of user: Domestic/Tea stall/ restaurant
2. Do you like the electric cooking system? Yes
3. What is the difficulty with the system: Cooking is slow (Yes); It takes more time (Yes); Frying is difficult ()

   Other: Small Pot.
4. How can it be improved?
5. What do you do when the food is being cooked: Sewing.
6. Will you continue with the system after the project is over: yes/no

   Why:
7. The system cost is BDT 27,000 Domestic

   BDT 25,000 Tea stall

   BDT 45,000 Restaurant

   Your monthly electricity bill was = BDT 64 and monthly saving was BDT 937

   Would you like to buy a system: Somehow yes/no?

   Why: If I have enough money then I will buy this system.

   If the answer is yes,

   Would you like to buy a system by full cash payment: yes/no

   Would you like to buy using monthly instalment: yes/no

   How much per month are you prepared to pay: BDT 1000-1200
8. Do your neighbors/friends/ others enquire about your new system? Yes/no

   Are they interested to adopt such a cooking system? Yes/no

To be filled up after using electric cooking appliances

Did you like electric cooking in comparison to your earlier cooking appliance?	yes/No	
If yes, what are the advantages? (you may choose more than one)	○ Clean ○ No smoke ○ No excessive heat ○ Easy cleaning of cooking pans ○ No health issue ○ Not to worry for stocking dry wood ○ Cooking can be done inside the house ○ Spare time for other household activities ○ Requires less attention while cooking ○ Other: Previously I had to wake up very early in the morning and start cooking food. Now as electric cooking requires less time and attention, I am a bit more relaxed	
What are the disadvantages (you may choose more than one)	○ Takes longer time to cook ○ Cooking some types of food is difficult ○ Electricity bill may be high ○ Power failure is a problem ○ Other:	
Did the appliance change the way you cook? If so, how?	N/A	
Have the responsibilities for preparing food changed at all with the new appliances? For example, do other members of the family now cook more often?	N/A	
Have you learned any new tips/techniques to help you cook with these appliances? If so, how did you learn them?	N/A	
Were there foods/dishes you found easy (or enjoyable) to cook in the appliance?	Meat, Pulses	
Were there foods/dishes you struggled to, or could not, cook using the appliance? If so, which?	Fry fish	

Do you think you will use electricity for cooking after the project is over?	Partial/full, Why: Save Gas cost, Have some free time for other work,
Would you recommend any of the appliances? Which ones? Why?	Pressure cooker (Less time and auto cooking) Both cooker
Have your neighbors/friends/family shown interest in acquiring these appliances?	
Do you feel that electric cooking requires less attention and you get some spare time?	Yes/No If yes how do you plan to use that time: Sewing, Household activity
Who is responsible for paying the electricity bill?	Myself
Who is responsible for decisions around cooking fuel?	Both
Who is responsible for decisions around cooking appliances?	Both
Do you experience power outages at all? - If so, how often? And how long do the outages last?	At night 4-5 days in month. Minimum 30-60 min
Do outages affect cooking with electrical appliances? yes If yes, how do you cook?	I use gas stove at night while power outage occurs.
Have you had any of electric cooking appliances breakdown or fail?	Rice cooker last month
If so, what was the problem?	Wiring/Human error/Electrical /Poor quality/durability/Wear and tear
How did you attempt to solve the problem?	

If something went wrong, is there someone in the area that you know who fixes electrical appliances?	Maybe electrician available
Has this experience affected your mindset with regards to buying future electric cooking appliances? If so, how?	N/A
Are there any other observations you would like to make?	N/A
Would you be interested in being involved in another cooking study?	Yes.

Appendix A4

INTERVIEW QUESTIONNAIRE FOR CLEAN COOKING PROJECT

SURVEYOR ASSESSMENT

Address: Alinagar, Satarkul, Badda, Dhaka		
Village/police station: Badda	Upazilla/District: Dhaka	
General law and order of the locality:	Lat/Long:	
Type of installation	A. DOMESTIC [____]	B. COMMERCIAL [__Tea stall__]
Possibility install 400Wp solar PV on the roof top (1.5mx3m)	A. Positive B. Negative C. Not sure	
Assessment of the owner's Interests	A. Positive B. Negative C. Not sure	

A. BACKGROUND OF THE RESPONDENTS

1. Name: Mohammad Basir			
2. Gender: A. Male B. Female	3. Age: A. Young Adult B. Middle Adult C. Late Adult		
4. Category: A. Main bread earner	B. Main Cook	C. Both	D. None
5. Total Family Member: 4	6. School Going Children: A. Yes B. No		
7. Education (Last Degree): Class 3	8. Occupation: Tea stall		
9. Total Monthly income (Approx.):BDT 15k-18k	10. Total Monthly Electricity Bill (Approx.): 800 BDT		
11. Total Monthly Fuel-cost (Approx.): BDT 2500	12. Affordability of Fuel-cost (Approx.):		

B. COOKING CONDTION BEFORE ADOPTING ELECTRIC COOKING

13. Who cooks	A. Family Member- Myself, wife	B. Others-
14. Type of cooking pots	A. Conventional pots	B. Induction cooker usable
15. Energy source for cooking	A. Gas (i) Cylinder (II) Other B. Wood C. Coal D. Electricity	
16 Usage of Electric Rice Cooker: A Yes B. No	Usage of Pressure Cooker: A Yes B. No	
17. Knowledge of another electric cooker	No	if yes than: Level of Usage: A. Regular B. Sometimes C. never
18. If not using electric kettle	WHY: A. cost B. Fear C. Dissatisfied Taste D. Did not know F. Others_____	
19. Number of burners for cooking	1 gas	
20. Time spend for cooking	7 AM to 10 PM	
21. Cooking for how many people	N/A	

C. Level of Interest in Fireless & Heat-less (Clean) Cooking without offering low-cost solution

(This part must be filled in in consultation with the person who physically cooks in the kitchen)

What difficulties are faced with cookers?	Heat (yes)	Smoke ( )	carbon particles ( )	pot cleaning ( )	Others ( )
Do you have any health problem related to kitchen usage?	Respiratory (No)		Visibility (No)	Others ( )	
How much spent for medicine every month?	N/A				

Data Collection after using the electric cooking system

1. Name: Mohammad Basir Type of user: Domestic/Tea stall/ restaurant
2. Do you like the electric cooking system? yes
3. What is the difficulty with the system: Cooking is slow ();
   It takes more time ( ); Frying is difficult ( )

   Other:
4. How can it be improved?
5. What do you do when the food is being cooked:
6. Will you continue with the system after the project is over: Yes/no
   Why:
7. The system cost is BDT 27,000 Domestic
   BDT 25,000 Tea stall
   BDT 45,000 Restaurant

   Your monthly electricity bill was = BDT 1,190 and monthly saving was BDT 810.

   Would you like to buy a system: yes/no?

   Why:

   If the answer is yes,

   Would you like to buy a system by full cash payment: yes/no (installment is better)

   Would you like to buy using monthly instalment: yes/no

   How much per month are you prepared to pay: BDT 1000-1500 BDT
8. Do your neighbors/friends/ others enquire about your new system? Yes/no
   Are they interested to adopt such a cooking system? Yes/no

To be filled up after using electric cooking appliances

Did you like electric cooking in comparison to your earlier cooking appliance?	yes/No	
If yes, what are the advantages? (you may choose more than one)	○ Clean ○ No smoke ○ No excessive heat ○ Easy cleaning of cooking pans ○ No health issue ○ Not to worry for stocking dry wood ○ Cooking can be done inside the house ○ Spare time for other household activities ○ Requires less attention while cooking ○ Other: Previously I had to wake up very early in the morning and start cooking food. Now as electric cooking requires less time and attention, I am a bit more relaxed	
What are the disadvantages (you may choose more than one)	○ Takes longer time to cook ○ Cooking some types of food is difficult ○ Electricity bill may be high ○ Power failure is a problem ○ Other:	
Did the appliance change the way you cook? If so, how?	N/A	
Have the responsibilities for preparing food changed at all with the new appliances? For example, do other members of the family now cook more often?	N/A	
Have you learned any new tips/techniques to help you cook with these appliances? If so, how did you learn them?	N/A	
Were there foods/dishes you found easy (or enjoyable) to cook in the appliance?	N/A	
Were there foods/dishes you struggled to, or could not, cook using the appliance? If so, which?	Tea liquor is thinner than previous.	

Do you think you will use electricity for cooking after the project is over?	Partial/full, Why: Save money, no need to think about buying gas in regular basis.
Would you recommend any of the appliances? Which ones? Why?	Pressure cooker (Less time and auto cooking)
Have your neighbors/friends/family shown interest in acquiring these appliances?	Yes
Do you feel that electric cooking requires less attention and you get some spare time?	Yes/No If yes how do you plan to use that time:
Who is responsible for paying the electricity bill?	Myself
Who is responsible for decisions around cooking fuel?	Myself
Who is responsible for decisions around cooking appliances?	Myself
Do you experience power outages at all? - If so, how often? And how long do the outages last?	30 minutes to 45 minutes in day.
Do outages affect cooking with electrical appliances? yes If yes, how do you cook?	Yes, I use cylinder gas while power outage occurs.
Have you had any of electric cooking appliances breakdown or fail?	1 kettle.
If so, what was the problem?	Wiring/Human error/Electrical /Poor quality/durability/Wear and tear
How did you attempt to solve the problem?	Discuss with Abdullah (RA)

If something went wrong, is there someone in the area that you know who fixes electrical appliances?	Yes
Has this experience affected your mindset with regards to buying future electric cooking appliances? If so, how?	If the appliances have warranty advantage then I will buy.
Are there any other observations you would like to make?	N/A
Would you be interested in being involved in another cooking study?	Yes.

Appendix A5

INTERVIEW QUESTIONNAIRE FOR CLEAN COOKING PROJECT

SURVEYOR ASSESSMENT

Address: Daroga bari road, Satarkul, Badda, Dhaka		
Village/police station: Badda	Upazilla/District: Dhaka	
General law and order of the locality:	Lat/Long:	
Type of installation	A. DOMESTIC [____]	B. COMMERCIAL [__Tea stall__]
Possibility install 400Wp solar PV on the roof top (1.5mx3m)	A. Positive B. Negative C. Not sure	
Assessment of the owner's Interests	A. Positive B. Negative C. Not sure	

A. BACKGROUND OF THE RESPONDENTS

1. Name: Mohammad Razzak			
2. Gender: A. Male B. Female	3. Age: A. Young Adult B. Middle Adult C. Late Adult		
4. Category: A. Main bread earner	B. Main Cook	C. Both	D. None
5. Total Family Member:	6. School Going Children: A. Yes B. No		
7. Education (Last Degree): Class 8	8. Occupation: Tea stall		
9. Total Monthly income (Approx.): BDT 15k-20k	10. Total Monthly Electricity Bill (Approx.): 800 BDT		
11. Total Monthly Fuel-cost (Approx.): BDT 2500	12. Affordability of Fuel-cost (Approx.):		

B. COOKING CONDTION BEFORE ADOPTING ELECTRIC COOKING

13. Who cooks	A. Family Member- Myself	B. Others- Niece
14. Type of cooking pots	A. Conventional pots	B. Induction cooker usable
15. Energy source for cooking	A. Gas (i) Cylinder (II) Other B. Wood C. Coal D. Electricity	
16 Usage of Electric Rice Cooker: A Yes B. No	Usage of Pressure Cooker: A Yes B. No	
17. Knowledge of another electric cooker	No	if yes than: Level of Usage: A. Regular B. Sometimes C. never
18. If not using electric kettle	WHY: A. cost B. Fear C. Dissatisfied Taste D. Did not know F. Others_____	
19. Number of burners for cooking	1 gas	
20. Time spend for cooking	7 AM to 10 PM	
21. Cooking for how many people	N/A	

C. Level of Interest in Fireless & Heat-less (Clean) Cooking without offering low-cost solution

(This part must be filled in in consultation with the person who physically cooks in the kitchen)

What difficulties are faced with cookers?	Heat (yes)	Smoke ( )	carbon particles ( )	pot cleaning ( )	Others ( )
Do you have any health problem related to kitchen usage?	Respiratory (No)		Visibility (No)	Others ( )	
How much spent for medicine every month?	N/A				

Data Collection after using the electric cooking system

1. Name: Mohammad Razzak Type of user: Domestic/Tea stall/ restaurant
2. Do you like the electric cooking system? yes
3. What is the difficulty with the system: Cooking is slow (In the Morning); It takes more time ( ); Frying is difficult ( )

   Other:
4. How can it be improved?
5. What do you do when the food is being cooked:
6. Will you continue with the system after the project is over: yes/no

   Why:
7. The system cost is BDT 27,000 Domestic
   BDT 25,000 Tea stall
   BDT 45,000 Restaurant

   Your monthly electricity bill was = BDT 1,424 and monthly saving was BDT 1,076.

   Would you like to buy a system: yes/no

   Why:

   If the answer is yes,

   Would you like to buy a system by full cash payment: yes/no (installment is better)

   Would you like to buy using monthly instalment: yes/no

   How much per month are you prepared to pay: BDT 1000-1500 BDT
8. Do your neighbors/friends/ others enquire about your new system? Yes/no
   Are they interested to adopt such a cooking system? Yes/no

To be filled up after using electric cooking appliances

Did you like electric cooking in comparison to your earlier cooking appliance?	yes/No	
If yes, what are the advantages? (you may choose more than one)	○ Clean ○ No smoke ○ No excessive heat ○ Easy cleaning of cooking pans ○ No health issue ○ Not to worry for stocking dry wood ○ Cooking can be done inside the house ○ Spare time for other household activities ○ Requires less attention while cooking ○ Other: Previously I had to wake up very early in the morning and start cooking food. Now as electric cooking requires less time and attention, I am a bit more relaxed	
What are the disadvantages (you may choose more than one)	○ Takes longer time to cook ○ Cooking some types of food is difficult ○ Electricity bill may be high ○ Power failure is a problem ○ Other:	
Did the appliance change the way you cook? If so, how?	N/A	
Have the responsibilities for preparing food changed at all with the new appliances? For example, do other members of the family now cook more often?	N/A	
Have you learned any new tips/techniques to help you cook with these appliances? If so, how did you learn them?	N/A	
Were there foods/dishes you found easy (or enjoyable) to cook in the appliance?	N/A	
Were there foods/dishes you struggled to, or could not, cook using the appliance? If so, which?	N/A	

Do you think you will use electricity for cooking after the project is over?	Partial/full, Why: Save money, Easy handling kettle.
Would you recommend any of the appliances? Which ones? Why?	Pressure cooker (Less time and auto cooking)
Have your neighbors/friends/family shown interest in acquiring these appliances?	Yes
Do you feel that electric cooking requires less attention and you get some spare time?	Yes/No If yes how do you plan to use that time:
Who is responsible for paying the electricity bill?	Myself
Who is responsible for decisions around cooking fuel?	Myself
Who is responsible for decisions around cooking appliances?	Myself
Do you experience power outages at all? - If so, how often? And how long do the outages last?	30 minutes to 1 hour in day (in the evening). 5-10 days in a month (winter), 20-25 days in a month (Summer)
Do outages affect cooking with electrical appliances? yes If yes, how do you cook?	Day light power outages does not affect cooking but at night we can not make tea because we have removed cylinder from the stall.
Have you had any of electric cooking appliances breakdown or fail?	Once last month.
If so, what was the problem?	Wiring/Human error/Electrical /Poor quality/durability/Wear and tear
How did you attempt to solve the problem?	Discuss with Abdullah (RA)

If something went wrong, is there someone in the area that you know who fixes electrical appliances?	Yes
Has this experience affected your mindset with regards to buying future electric cooking appliances? If so, how?	No
Are there any other observations you would like to make?	N/A
Would you be interested in being involved in another cooking study?	Yes, if easy.

Appendix A6

INTERVIEW QUESTIONNAIRE FOR CLEAN COOKING PROJECT

SURVEYOR ASSESSMENT (Before using electric cooking)

Address: Somser nagar, Beraid, Badda, Dhaka, Word 42		
Village/police station: Badda	Upazilla/District: Dhaka	
General law and order of the locality:	Lat/Long:	
Type of installation	A. DOMESTIC [____]	B. COMMERCIAL [__yes __]
Possibility install 400Wp solar PV on the roof top (1.5mx3m)	A. Positive B. Negative C. Not sure	
Assessment of the owner's Interests	A. Positive B. Negative C. Not sure	

A. BACKGROUND OF THE RESPONDENTS

1. Name: Mohammad Suruz			
2. Gender: A. Male B. Female	3. Age: A. Young Adult B. Middle Adult C. Late Adult		
4. Category: A. Main bread earner	B. Main Cook	C. Both	D. None
5. Total Family Member:	6. School Going Children: A. Yes B. No		
7. Education (Last Degree): SSC	8. Occupation: Restaurant Owner		
9. Total Monthly income (Approx.): 15k-18k	10. Total Monthly Electricity Bill (Approx.): 350 BDT		
11. Total Monthly Fuel-cost (Approx.): ******	12. Affordability of Fuel-cost (Approx.):		

B. COOKING CONDTION BEFORE ADOPTING ELECTRIC COOKING

13. Who cooks	A. Family Member-Myself	B. Others
14. Type of cooking pots	A. Conventional pots	B. Induction cooker usable
15. Energy source for cooking	A. Gas (i) Cylinder (II) Other B. Wood C. Coal D. Electricity	
16 Usage of Electric Rice Cooker: A Yes B. No	Usage of Pressure Cooker: A Yes B. No	
17. Knowledge of another electric cooker	****	if yes than: Level of Usage: A. regular B. Sometimes C. never
18. If not using electric cooker	WHY: A. cost B. Fear C. Dissatisfied Taste D. Did not know F. Others_____	
19. Number of burners for cooking	1 gas big burner.	
20. Time spend for cooking	1.5-2.0 hours	
21. Cooking for how many people	40-50	

C. Level of Interest in Fireless & Heat-less (Clean) Cooking without offering low-cost solution

(This part must be filled in in consultation with the person who physically cooks in the kitchen)

What difficulties are faced with cookers?	Heat (yes)	Smoke ()	carbon particles ( )	pot cleaning ( )	Others ( )
Do you have any health problem related to kitchen usage?	Respiratory (No)		Visibility (No)	Others (Allergy)	
How much spent for medicine every month?	Rarely takes in 2 or 3 months.				

Data Collection after using the electric cooking system

1. Name: Mohammad Suruz Type of user: Domestic/Tea stall/ Restaurant
2. Do you like the electric cooking system? Yes
3. What is the difficulty with the system: Cooking is slow (yes); It takes more time (yes, but in electric pressure cooker it takes less time); Frying is difficult (yes)

   Other:
4. How can it be improved? Cooking appliances that can fry.
5. What do you do when the food is being cooked: Prepare another food to cook.
6. Will you continue with the system after the project is over: yes/no
   Why: system is good.
7. The system cost is BDT 27,000 Domestic
   BDT 25,000 Tea stall
   BDT 45,000 Restaurant

   Your monthly electricity bill was = BDT 372 and monthly saving was BDT 2,170.

   Would you like to buy a system: yes/no

   Why: Good cooking system, save money, save time while using Electric pressure cooker.

   If the answer is yes,

   Would you like to buy a system by full cash payment: yes/no

   Would you like to buy using monthly instalment: yes/no

   How much per month are you prepared to pay: 2000-2500 BDT
8. Do your neighbors/friends/ others enquire about your new system? Yes/no
   Are they interested to adopt such a cooking system? Yes/no

To be filled up after using electric cooking appliances

Did you like electric cooking in comparison to your earlier cooking appliance?	yes/No	
If yes, what are the advantages? (you may choose more than one)	○ Clean ○ No smoke ○ No excessive heat ○ Easy cleaning of cooking pans ○ No health issue ○ Not to worry for stocking dry wood ○ Cooking can be done inside the house ○ Spare time for other household activities ○ Requires less attention while cooking ○ Other: Previously I had to wake up very early in the morning and start cooking food. Now as electric cooking requires less time and attention, I am a bit more relaxed	
What are the disadvantages (you may choose more than one)	○ Takes longer time to cook ○ Cooking some types of food is difficult ○ Electricity bill may be high ○ Power failure is a problem ○ Other:	
Did the appliance change the way you cook? If so, how?		
Have the responsibilities for preparing food changed at all with the new appliances? For example, do other members of the family now cook more often?	N/A	
Have you learned any new tips/techniques to help you cook with these appliances? If so, how did you learn them?	N/A	
Were there foods/dishes you found easy (or enjoyable) to cook in the appliance?	Beef, Chicken cooking. Because of easy cooking.	
Were there foods/dishes you struggled to, or could not, cook using the appliance? If so, which?	Onion, pre-fry.	

Do you think you will use electricity for cooking after the project is over?	Partial/full, Why: Full, Easy method, Save Money.
Would you recommend any of the appliances? Which ones? Why?	Both Rice Cooker & Pressure cooker (Less time and auto cooking)
Have your neighbors/friends/family shown interest in acquiring these appliances?	Yes
Do you feel that electric cooking requires less attention and you get some spare time?	Yes/No If yes how do you plan to use that time: Prepare for another food.
Who is responsible for paying the electricity bill?	Myself
Who is responsible for decisions around cooking fuel?	Myself
Who is responsible for decisions around cooking appliances?	Myself
Do you experience power outages at all? - If so, how often? And how long do the outages last?	No
Do outages affect cooking with electrical appliances? yes If yes, how do you cook?	No
Have you had any of electric cooking appliances breakdown or fail?	No
If so, what was the problem?	Wiring/Human error/Electrical /Poor quality/durability/Wear and tear
How did you attempt to solve the problem?	

If something went wrong, is there someone in the area that you know who fixes electrical appliances?	Do not know.
Has this experience affected your mindset with regards to buying future electric cooking appliances? If so, how?	No
Are there any other observations you would like to make?	No.
Would you be interested in being involved in another cooking study?	Yes.