AC Electric Pressure Cooker DC Conversion kit - Phase Zero Report

Version 1 draft July/2020

Released for publication June 2021.

Authors: Andrew Larkins, Zsolt Gaspar, Andrew Roberts (OPD) with N Scott and S Batchelor (Gamos)

Working Paper for Comment

Disclaimer – *This material has been funded by UK Aid from the UK government; however the views expressed do not necessarily reflect the UK government's official policies.*

1 Executive Summary

This working paper was produced mainly by Oxford Product Design. OPD were commissioned on to investigate the possibility of making a DC conversion Kit for AC electric pressure cookers. Working alongside Gamos, OPD undertook a Phase 0 investigation of the constraints of commercial EPCs, and what this might mean for designing such a DC conversion kit.

The working paper shows their speculation and their online investigations.

Drawing on their considerable professional design backgrounds, they conclude by proposing to add heater cartridges to the base of any EPC.

They illustrate how this could be applied to an Amazon Basic EPC (UK available), but stop short of actually undertaking the modification and testing the performance.

The Phase 0 report was intended for discussion with the client (MECS through Gamos) and was not originally intended for publication (although all work within MECS is open source). The information contained could potentially prove useful for partners and collaborators and we now wish to place it on our website for wider use. (June 2021). It is presented as a working paper for comment.

It can be shared as an open resource and any researcher or interested party is welcome to use the ideas as a launch to further explore the resulting conclusions, or to pushback where the existing research fails to address a concern. As well as the official UK Aid disclaimer above we acknowledge that these thoughts are incomplete and any organisations using the following discussion to further their work must rely on their own enquiries and due diligence as to the suitability of any research outputs, products or services provided by any third parties and MECS, and the institutions funded to run MECS shall have no legal liability to any party for any losses flowing from any third party's research, products or services.

Contents

List of Figures

Fair Deal use of photos and illustrations - All figures and photos remain copyright of their original owners, and we are grateful for their non commercial use here to illustrate research and have acknowledged the source where possible.

2 Introduction

MECS has been investigating pressure cooking using renewable energy, such as solar. Pressure cooking is one of the most energy efficient ways of cooking and has the potential to be utilised in areas and communities that do not have access to reliable power.

This report describes a market need and an approach to improving the potential demand for EPCs. Existing EPC technology is described with a focus on elements which need to change for the target market and an outline specification for the new product is provided.

A number of means of implementation are described and compared, along with the key elements required to make prototypes.

3 Market need

780 million people have no access to electricity from a national or regional power grid. Power forthese people is increasingly being provided by mini grid and solar home systems.

- Mini grids tend to be AC 110 or 220v
- Most solar home system are DC and are either 24 to 48V and include battery storage.
- The power available in these systems is limited.

Cooking by electricity is convenient, but it has a high-power consumption as compared to many otheruses of electricity, such as lighting, TV or charging a phone. This high-power peak consumption is often not well supported by mini grid and solar home systems or even weak national grid connections. Partly as a result of limited electrical supply, 3 billion people are fed by food cooked with heat from biomass, which is slow, inefficient and causes pollution.

Electric pressure cookers (EPC) offer a highly energy efficient way of cooking:

- By increasing cooking temperatures for boiled foods, cooking times are reduced dramatically.
- Heat transfer from the electrical heating element to the cooking pot is efficient.
- EPC have good thermal insulation compared to a pan on a fire or hotplate reducing heat loss duringcooking.

EPC are not widely adopted in regions with poor power supply

- Commercially available EPCs are designed for use with power from an AC grid. No reliable EPCs areavailable for use on DC systems.
- Typical domestic EPCs power consumption is 600W to 1kW when the heater is on.
- Battery storage and weak grid may not be able consistently to supply sufficiently high power used by EPC.

Other factors such as users' familiarity with EPCs are not considered in this document.

EPCs offer much higher energy efficiency than cooking on a biomass fire . For many users efficiency is key rather than speed of cooking. Speed only must compete with cooking on a fire. With no pressure cooking, cooking times of typical foods in target markets, may be 3 to 4 hours. (Beans and other starchy food are typically the reason for long cooking time needed, for example ugali – dense starch materials https://en.wikipedia.org/wiki/Ugali).

MECS research in 2018 https://mecs.org.uk/wp-content/uploads/2019/10/Pressure-cooker- selection-guide-v1.2-8-3-18.pdf identified only one model of DC pressure cooker. This is aimed at cars and trucks, but could not be recommended as it did not include adequate safety features. This supplier appears to still be producing DC pressure cookers.

Figure 1 A range of DC EPC. 12 and 24V, 250 to 300 W, 2.8L and 5L from https://www.alibaba.com/product-detail/DC-12V-24V-stainless-steel-electric_60760544437.html

Figure 2 Example EPC safety features from https://www.alibaba.com/product-detail/OEM-Stainless-Steel- Rice-Multifunction-Pot_60722190529.html

For more details of safety features also see https://instantpot.com/safety-2/

4 Plan for Phased market development

MECS plans to promote the use of EPC for energy efficient cooking. They have approached manufacturers regarding the production of a high-quality DC powered EPC, but none is currently interested as the market for this type of product is currently unproven.

OEM manufacturers approached include:-

https://en.wikipedia.org/wiki/Midea_Group Midea - 20 to 30 different models.

http://www.derandi.cn/ Smaller company who may be more flexible

As a suitable off-the-shelf product is not available, a phased process is proposed to help verify benefits and develop the market for this class of product.

4.1 Phase 1 - Proof of concept trials

10 units will be modified in UK and supplied for trials in the initial target countries of Kenya, Uganda, Ethiopia.

Use of these EPC will be monitored closely to demonstrate the effectiveness for the EPC. The design will include a data logger to support the trial.

4.2 Phase 2 - Conversion kit

To scale up the use of EPC it is proposed to produce a retro fit conversion kit which allows the conversion of – 100s to 1000s of EPC to DC operation.

Ideally this conversion kit would

- consist of a boxed electronic assembly fitted between the DC supply and the unmodified EPC appliance
- work for a wide range of cookers if possible
- reuse controls within the device rather than controls on a separate box.
- be fitted in the country of use by local engineers
- be low cost.
- have a high power efficiency.

It is recognised that these goals may be difficult to achieve and practical options may only address a subset of these goals.

4.3 Phase 3 - OEM build

Once there is proven successful use of a thousand or more DC EPCs in the target market, it is anticipated that manufacturers will be willing to make products for the market. The annual market size could be millions of units. The total available market is estimated to be ~150 Million households.

MECS plans to transfer design information and knowhow to any manufacturer who is willing to manufacture an appropriate product.

5 EPC operation

For a simple introduction to the operation of an EPC see https://en.wikipedia.org/wiki/Pressure_cooking . Existing EPCs are available in a wide range of different models. Some look as if they have lots of control options, but the control is basically a thermostat and a timer.

At turn-on, the heater starts warming the food. At 100C, the safety spigot is engaged preventing opening of the lid while the cooker is at pressure. Above 100C, pressure rises and temperature is controlled typically to 115C by a simple on/off thermostat.

The cook timer starts when the pot reaches the cook temperature and will turn off when the pre-set cooking time is complete.

Some products claim to raise temperature slowly for thick stew however Gamos has not seen this in practice and it is not required for the proof-of-concept.

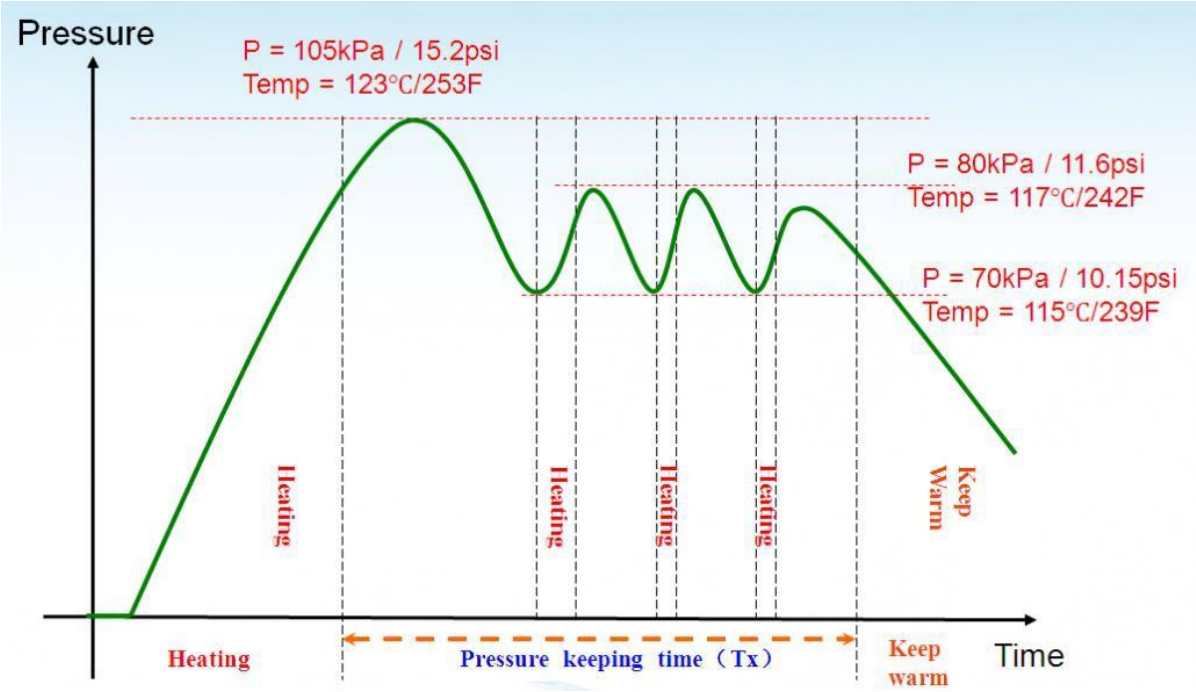

Figure 3 Example cooking cycle from https://instantpot.com/portfolio-item/how-electric-pressure-cookers-work/

The simple on/off thermostat control mechanism means that the heater is either on at full power or off. This places a high peak load on the power supply, or no load. This works well for use cases with a good connection to a large grid system. However for solar battery storage and weak grid systems, it would be better if the peak power consumption were lowered, even if the heating time were extended. For example during the pressure keeping time, the battery storage in a solar home system may be significantly depleted, so may not be able to supply the peak power demand.

Most EPCs operate at a single power level, but research has identified an EPC technology which includes two heaters. It has one for heat up and a second for pressure maintenance. This allows lower peak power during the pressure keeping time.

http://www.seekic.com/circuit_diagram/Repairing_Circuit/Two_Kinds_Of_Heat_Preservation_Type_Automatic_Electric_Pressure_Cooker_Principle_And_Repairing_Circuit.html

6 EPC Specification

6.1 Core specification

The EPC should match commercial products on the market with the following characteristics:

- Capacity ~6 litre and above. (3 litre is too small for an African family)
- Peak power up to ~1kW (600 W min) to allow fast warm-up if high power is available.
- Maintain user interface (UI) of basic to mid range commercial products – desirable.
- The minimal UI should be a timer and indicator of cooking phases:- Heating, At temperature, Done.
- Maintain safety features of current commercial products - essential

6.2 Essential new features

Operation from DC supply. 48V nominal is proposed, rather than 24v, as it is more common in the target markets and supply currents are lower allowing the use of thinner more flexible cables.

Must be able to operate at lower power when a supply 600W - 1kW is not available. Power in the region of 300-400 W is the suggested minimum by Gamos research. https://www.mdpi.com/1996- 1073/11/11/2933/htm and Low Power Electric Pressure Cookers, Early draft Paper 15/April/2020

6.3 Data logging requirements (for trials only)

All data should be date/time stamped Logged data to include:-

- User turn on/off events
- Supply voltage
- Power consumptions vs time
- Temperature vs time – outside of pressure pot.

Data storage and transfer

- Live data transfer using WiFi not practical
- Data should be stored and retained when power is off.

Storage capacity should be sufficient for trials of up to 3 months before data down load.

- Data should be transferred to a cloud data service via
- Either an app on a phone. Data transfer for EPC to phone via Bluetooth.

Or include GSM module with SIM card in the EPC.

Build it in for easiest user experience, and most accuracy/highest frequency of data upload, but this may add to cost and development complexity. (Bluetooth logger is used on current experiment. It is a pain to send out person to collect the data.)

6.4 Other potential product ideas

How much battery charge do they have? Is there enough energy to cook? Could a cooking power available indicator be included? This was discussed, but is outside the scope of the product and is more likely to be a feature of the controller in the solar home battery storage system.

The option of maximum power point tracking (MPPT) for direct solar heating with no battery storage or poor charge control system. A crude concept using diodes is shown in "Hot diodes!: Dirt cheap cooking and electricity for the global poor?" https://www.sciencedirect.com/science/article/pii/S2352728519300508

MPPT directly in the EPC system is unlikely to be useful as most home solar grid systems will include a battery and charger with MPPT.

Weak AC grid EPC product, that includes better power control allowing lowering the operating power if grid voltage starts to fall.

7 EPC heating technology

Existing EPCs use resistive heating plates (also known as elements) to raise the temperature of the food. These are powered at the AC supply voltage, typically 110 or 220 V. Temperature is controlled using either a simple bimetallic thermostat, or with a temperature sensor and electronic control. One or more thermal fuses are added in series with the heating element as an over temperature safety feature.

Initial research shows the heating plates are of a similar form factor. A circular heating element is embedded in a plate that the cooking pot sits on. There is a hole in the centre of the plate for a thermostat measuring the temperature of the pot. The plate appears to be made from aluminium which should provide good thermal conductivity and they are relatively thin, probably to reduce thermal mass for fast heat up and reduce costs.

There is significant product to product variation in size and mounting holes. Different elements are used for 110V and 220/240V operation.

Figure 4 Example EPC hot plates https://guide.alibaba.com/guidesearch.html?fsb=y&IndexArea=product_en&CatId=&SearchText=electric+pressure+cooker+heating+plate

Figure 5 Example EPC hot plates https://guide.alibaba.com/shopping-guides/china_dc-hot-plate.html

As noted in an earlier section at least one EPC has two power levels. It is assumed the heating element is like the one shown in Figure 6 Dual element heater https://www.alibaba.com/product- detail/electric-heating-element-for-pressure-cooker_62104143055.html below. This has two concentric circular heating elements.

Figure 6 Dual element heater https://www.alibaba.com/product-detail/electric-heating-element-for- pressure-cooker_62104143055.html

Some more complex EPCs may also include a halogen lamp for grilling, but this is not considered further as the initial focus is a simple EPC, without a grill function.

Figure 7 Infra red heater for grill function from https://www.alibaba.com/product-detail/Electric-pressure-cooker-golden-halogen-lamp_62158207945.html

8 EPC for 10-unit phase 1 trial

MECS suggests that a simple EPC should be used as the basis of the initial 10 unit trial. Two models from Amazon and Instant Pot were given as examples.

Figure 8 Amazon Basics EPC

Figure 9 Instant Pot EPC

The construction of Instant Pot EPC was studied to assess the complexity of replacement of the heating element and or control electronics.

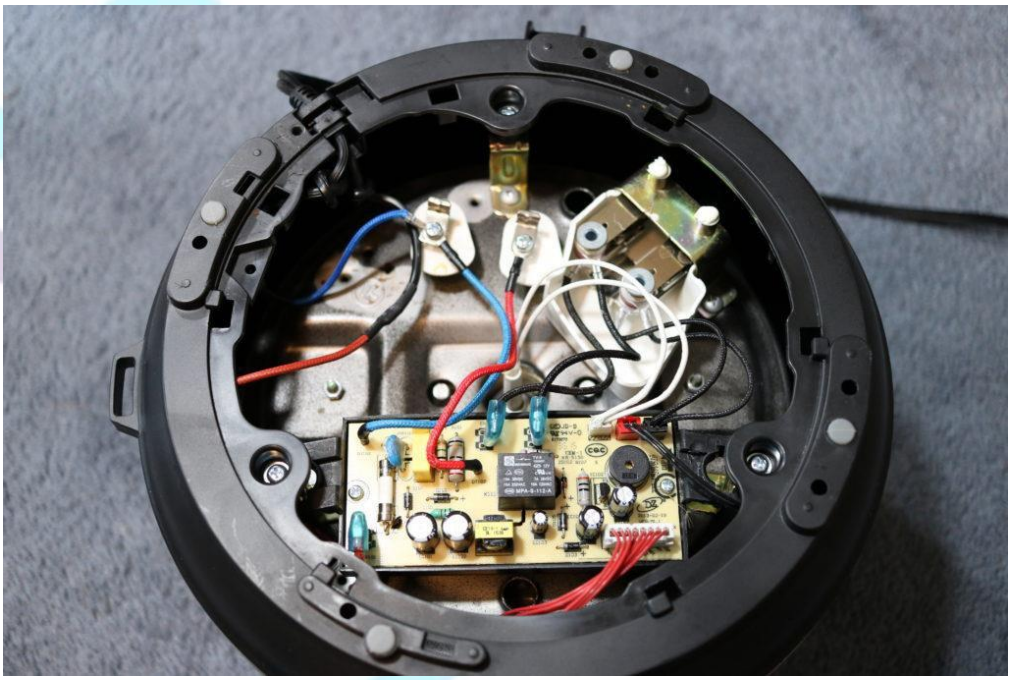

Figure 10 https://frugalrepair.com/2018/04/how-to-repair-instant-pot-not-heating-or-working/

The main control PCB and heater connections are in the base of the EPC.

Figure 11 Power control circuit board. Images from http://media.davebaar.com/wordpress/?p=1368

The power control system appears to be reasonably simple. It uses a transformer to generate a low voltage supply DC supply for the control system and a relay as the high current switching device based on the temperature measured by the temperature sensor. The transformer relies on an AC supply for operation and would not work with DC.

The control buttons and display are on a separate board mounted in the side.

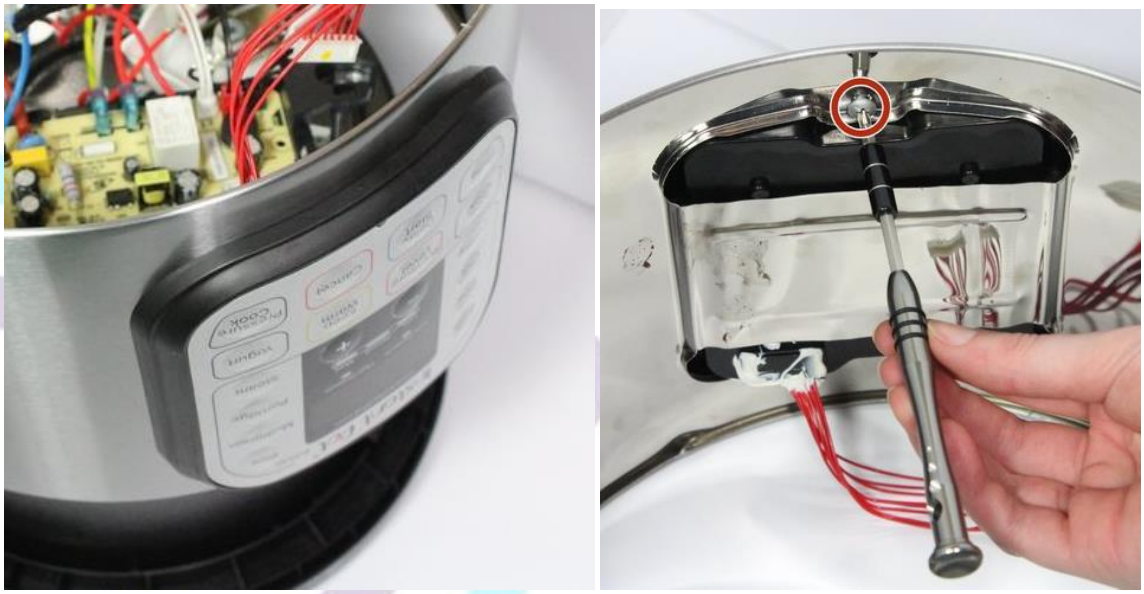

Figure 12 Instant Pot display and button module https://www.ifixit.com/Guide/Instant+Pot+IP-DUO80+V2+LED+Display+Replacement/103064

The design of the Instant Pot heating plate varies between models.

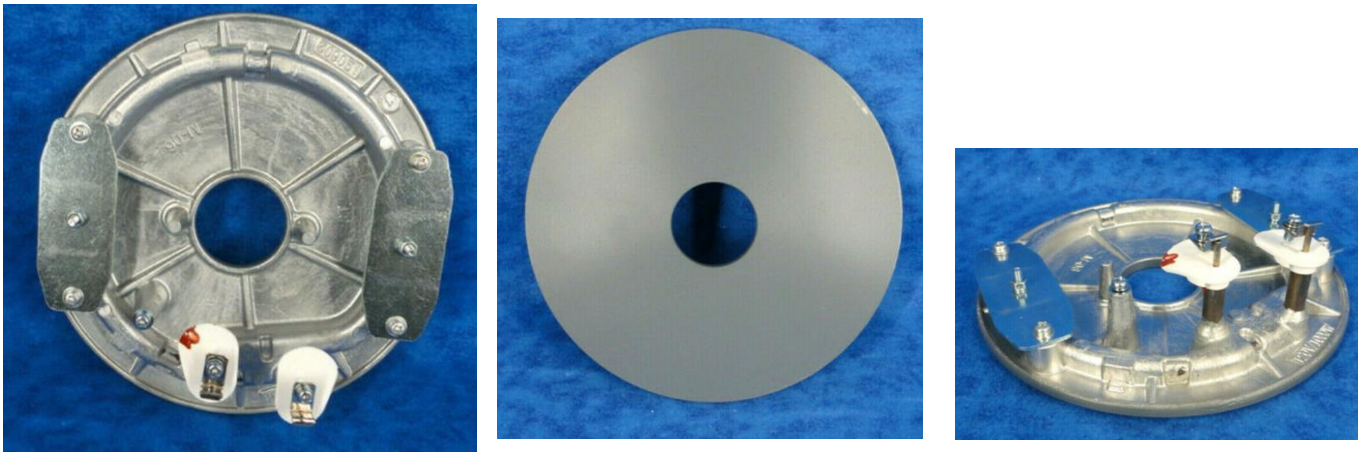

Figure 13 Instant Pot Duo 60 V3 6qt Replacement Heating Element https://www.ebay.co.uk/itm/164208451821

It should be noted that the description of this element refers to a specific version, V3, of one model.

Figure 14 https://www.ebay.co.uk/itm/Instant-Pot-ultra-6-qt-Replacement-Part-HEATING-ELEMENT/114234322955

Since the initial target market for trials is in Africa examples of EPC available in Uganda were identified.

Figure 15 https://www.jumia.ug/sinbo-sinbo-10-in-1-electric-pressure-cooker-6.0-litre-gold-4457976.html

This is a 220V, 50Hz, 900 Watt EPC which appears similar to models found in Europe and USA.

Figure 16 Super General 5L Electric Pressure Cooker https://www.jumia.ug/generic-super-general-5l-electric-pressure-cooker-black-2347676.html

This model is 5L, but is a lower power of 500W and has a very simple rotary control timer, which include the features of the minimal user interface described in the specification. This timer is likely to be similar to product found on Alibaba https://www.alibaba.com/product-detail/Electric-Pressure-cooker-timer_1690316614.html .

The time delay is based on a mechanism that uses the AC frequency for timing, it would not work with a DC supply.

For analysis of temperatures within the EPC see report "An Investigation into the Functionality and Efficiency of an Electric Pressure Cooker Bought in Kenya Intended for the Domestic Market: 'Sayona PPS 6 litre'." https://mecs.org.uk/wp-content/uploads/2019/12/Sayona-EPC-Description-and-Test- Results-V1.0.pdf

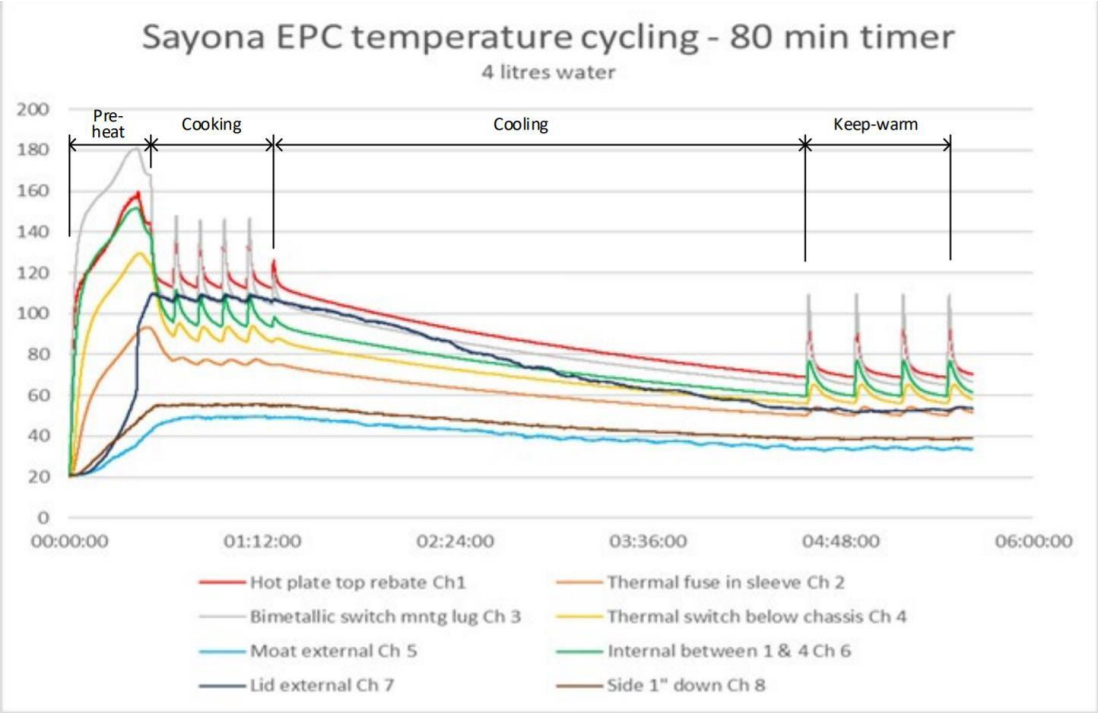

Figure https://mecs.org.uk/wp-content/uploads/2019/12/Sayona-EPC-Description-and-Test- Results-V1.0.pdf

During heating the hot plate is controlled to a peak temperature of nominally 145C. A thermal fuse is used for protection at a high temperature, for example 192C. Any replacement heater plate would need to be able to remain safe in fault conditions up to approximately 200C.

9 Options for 48V DC operation

Multiple options for getting an EPC to operate at 48V DC are analysed below.

9.1 Use 48V DC to AC inverter

A DC to AC inverter could be used to generate 110 or 220V AC. This allows use of an unmodified EPC retaining all features. However, the inverter is a high cost item, probably costing more than an EPC.

Inverters are available off the shelf and efficiency is reasonable typically 85 to 95% for example TS- 1000-248 https://www.meanwell.co.uk/pub/media/productPDF/TS-1000-SPEC.PDF

A bespoke inverter could be used to implement power control. This could reduce the output voltage allowing power control, but the lower voltage may then require modification to the EPC. Any inverter- based solution may be cost prohibitive for volume production and is not considered a viable long- term option but may be a potential for proof of concept trials.

9.2 Supply 48V DC to the EPC existing heating element

The heater element in an existing EPC could be supplied with 48V DC. Choosing a 110V EPC would maximise the power, compared to 220V EPC. However, at 48V operation of a 110V element would only provide 20% of the heating power. This not considered viable as it may not raise the temperature high enough to pressure cook the food and is therefore not considered further.

9.3 48V DC to 110V DC power conversion.

An EPC heating element designed for 110V AC would work when powered with 110V DC. A DC to DC power converter would be required.

Taking a nominal input voltage of 48V, a simple boost converter could produce a variable output voltage between 48 and 110V. This would allow adaptive power control, allowing full power operation during the heat up phase and reduced power operation during the temperature maintain cooking phase.

The EPC control thermostat and timer control electronics would require some adaption. For most EPC a simple DC regulator could be used to power the control electronics, replacing the transformer found in many EPC.

A DC to DC converter should be significantly lower cost than a DC to AC converter proposed as an earlier option, but it is still relatively expensive compared to a simple thermostatically controlled heater.

9.4 48V heating element

A new 48V DC heating element could be fitted in the EPC. This would allow operation direct from 48V without the need for an expensive DC to AC or DC to DC converter.

A custom part would be required specific to the EPC model being modified. Connectors, cables, internal thermal fuses and the control system would need to be rated for the higher currents at low voltage.

Adaptive power control could be achieved using Pulse Width Modulation (PWM) operation, at the expense of slightly more expensive control electronics.

9.5 Dual 48V heating element

As an alternative to PWM power control mentioned in the previous option a 48V EPC could be produced with two heating elements. For example, a 300W and a 500W. With simple control electronics this would allow powers over a wide range of 800W, 500W, 300W, 187.5W, 0W.

9.6 Summary of options

Design goal	48V DC to AC inverter	48V DC to 110V DC power conversion	48V heating element	Dual 48V heating element
Estimated efficiency	90%	95%	100%	100%
Power control with peak load reduction	Not viable. Would require a custom inverter and modified EPC.	Yes Continuously variable via DC-DC converter	Potentially Continuously variable via PWM.	Yes 5 power levels
Unit cost in volume	High Inverter is expensive but can be used with am unmodified EPC.	Medium	Low Custom parts so loss of economy of scale on parts for 110/220V	Low Custom parts so loss of economy of scale on parts for 110/220V
Modification to EPC	None	Low Power control board and power connector.	High Heating element, power control board and power connector.	High Heating element, power control board and power connector.
Range of EPCs supported by conversion kit.	Works with a wide range of EPCs.	May work with a few models.	Model specific	Model specific

A custom 48V heater, and modified control electronics is probably the most cost-effective long-term solution for high volume OEM production.

10 Battery technology

When designing a battery powered system, such as the proposed 48v EPC, it is important to understand what battery technology will be used as it can have significantly different discharge characteristics. Power for a resistive heater varies as the square of supply voltage so a 20% drop in voltage will result in approximately 40% drop in power.

An example of two types of 48v nominal battery are shown in the graph below. The fully charged lithium battery may be as high as 59v and a deeply discharged lead acid battery may be as low as 42v.

Lithium ion batteries have a very flat discharge curve from full charge to 90% discharged which would give a relatively constant power with a resistive heater. Whereas a lead-acid battery voltage varies significantly from

full charge to 90% discharged. A resistive heater for a lead-acid battery would give only 60% of the power at 90% discharge (44v), compared to fully charged (56v).

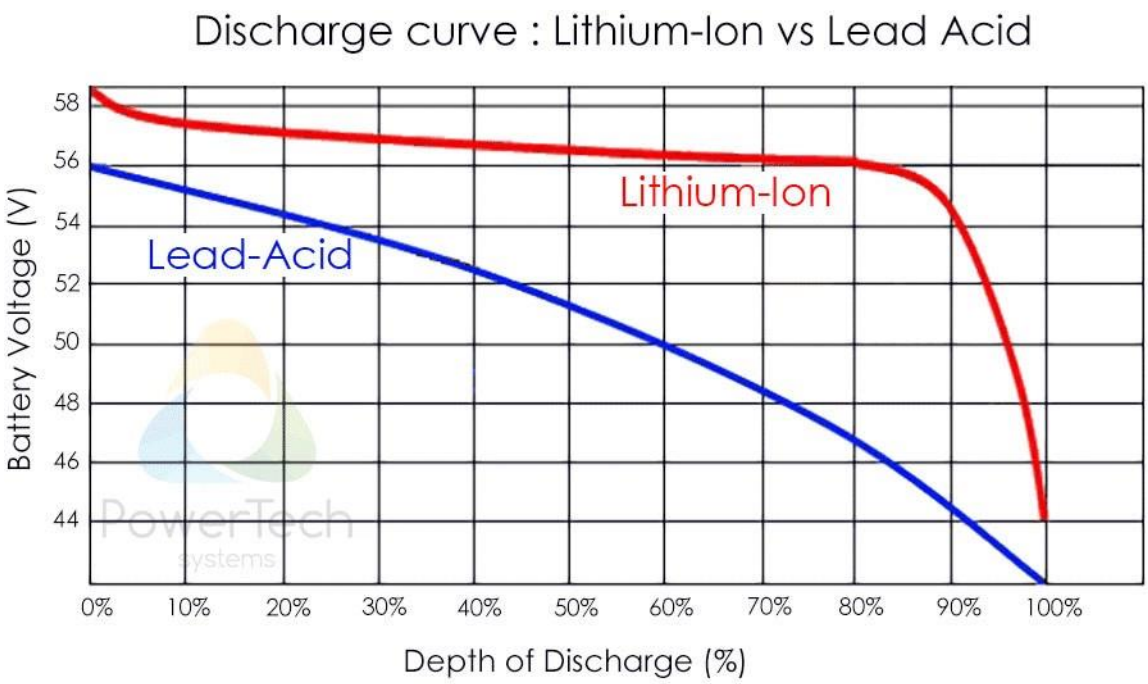

Figure 17 Battery discharge curves for nominal 48V battery https://www.powertechsystems.eu/home/tech-corner/lithium-ion-state-of-charge-soc-measurement/

Voltage will also vary significantly with temperature and load current.

Anticipated battery technology combined with wiring resistance should be considered in detail before the 48V heating element is designed.

Power control technology for example using a variable voltage DC-DC converter or PWM for direct heating could be using to minimise power variation with battery voltage.

11 Prototype 48v heating element

The options of fitting a thin heating plate between the existing hot plate in the EPC and the bottom of the post was considered. Thin custom heating mats are available using a range of technologies, including some with a thinness of less than 1 mm.

Figure 18 Rubber mat heaterhttps://www.elmatic.co.uk/products/silicon-rubber-heaters/

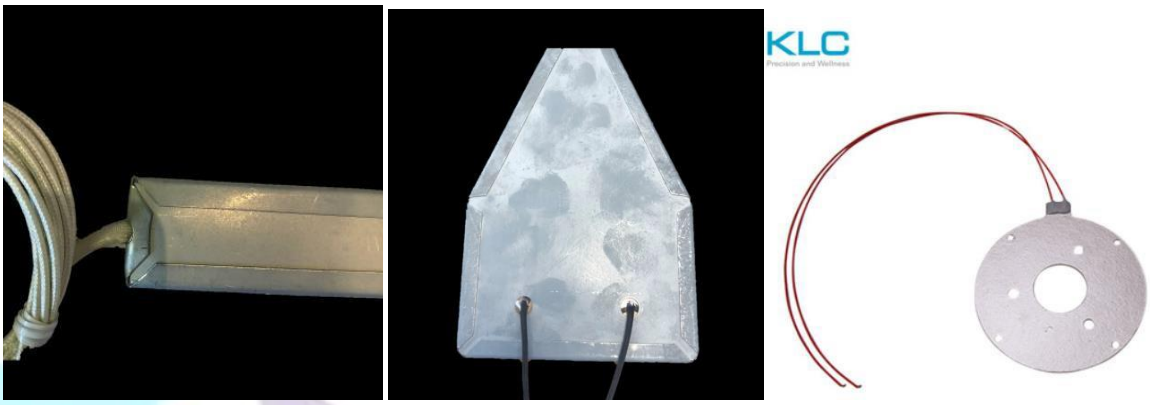

Figure 19 Mica heating plates https://www.t-uk.co.uk/products/heating-solutions/mica-strip-heaters/ https://www.alibaba.com/product-detail/Mica-Film-High-Temperature-Electric-Heating_60746120230.html

This option is not considered viable the inner pot would be raised by the thickness of the heater plus the thickness of mechanical protection for heating element to prevent damage by the pot. This is likely to adversely impact the sealing of the inner pot to lid and the operation of the temperature sensor on the bottom of the pot.

Heating element manufacturers would typically require high volume order to produce custom heating elements of the type used in EPCs. For the initial proof of concept prototype, a custom heating plate could be designed and manufactured to fit the available space and provide similar mounting points into the case. The dimensions of the existing heating plate in an EPC could be reverse engineered by measurement of the original 220V AC component.

Heating for the new plate could be provided either by several high-power, high temperature resistors or cartridge heaters. These would be selected to provide the required power rating and would spaced around the plate to provide the even heating. Example of the type of parts are shown below.

Cartridge heaters are typically used for heating industrial equipment. Typically, the cartridge is inserted into the side of a plate to heat it.

Figure 20 48V cartridge heater. https://www.elmatic.co.uk/product/type-g-cartridge-heater-140w-48v/

Figure 21 Heater plate design for cartridge heaters. https://uk.misumi-ec.com/vona2/detail/110300384060/

Wire wound resistors are available in a wide range of different power ratings and are suitable to bolt to the bottom of a hot plate. These may be easier to fit within the typical form of an EPC.

Figure 22 High power wire wound resistor https://uk.farnell.com/cgs-te-connectivity/2-1630012-5/res-wirewound-0r47-150w-solder/dp/2917407?st=HSc150

Low cost, high power wire wound resistors are available from a number of Asian sources. For example https://www.alibaba.com/product-detail/50W-4-OHM-4R-Aluminum-Shell_60828567736.html

As proposed above it would be possible to design a new metal hot plate with attachment points resistors or cartridge heaters. This may be viable for a phase 1 proof-of-concept, but the design would not be viable for a Phase 2 conversion kit as the hot plate design is specific to one model of EPC.

An alternative would be to attach the resistors or cartridge heaters to the existing hotplate in the EPC using a thermally conductive high temperature adhesive.

Figure 23 Example of potential location of heating resistors

Initial research show that there are potential Epoxy

https://www.final-materials.com/gb/258-thermally-conductive-epoxy

and cement based adhesives http://www.glassbond.co.uk/hightemperatureceramicadhesives/ . Some of which are specifically designed for this type of heating elements and hot plates. http://www.glassbond.co.uk/wp-content/uploads/2018/09/Glassbond-No-78-3-datasheet-2018.pdf

More detailed analysis would be required to confirm that adequate space for the heaters is available across a range of models and the thermal performance is acceptable.

12 Phase 0.1 – Details and space on Amazon Basics

Amazon Basics pressure cooker

Heating plate

https://www.amazon.co.uk/Amazonbasics-purpose-Electric-Pressure-Stainless/dp/B079LPM137

OXFORD PRODUCT DESIGN

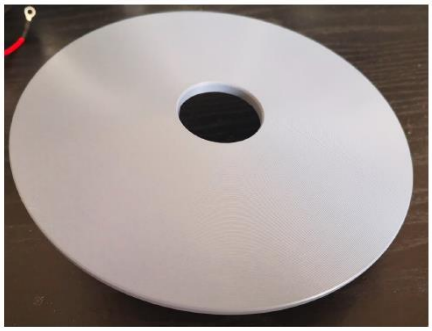

Top side

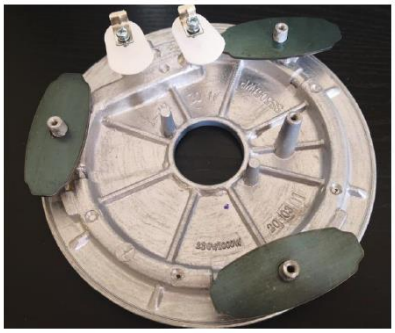

Bottom side

Inside area to fit the plate

Plate diameter: 182mm
Internal hole diameter: 39mm
1000W @230Vac

If existing element used at 48V it uses ~40W

Amazon Basics pressure cooker

Heating plate dimensions

OXFORD PRODUCT DESIGN

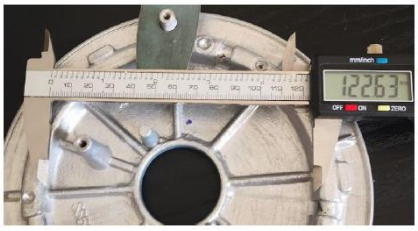

Heating plate modification for DC operation

Off the shelf cartridge heaters

OXFORD PRODUCT DESIGN

Use 6pcs 100W cartridge heater:
https://www.aliexpress.com/item/32807695264.html

- 27x6.3mm each
- Glue them to plate or use thermal paste and a cover plate to secure them
- Electrically connected in parallel
- Use the existing element as part of the system to increase power and use as electrical connection

Preferred option

Use 12pcs 50W cartridge heater:
https://www.aliexpress.com/item/32917909937.html

- 20x6mm each
- Glue them to plate or use thermal paste and a cover plate to secure them
- Electrically connected two in series and 6 twin in parallel
- Use the existing element as part of the system to increase power and use as electrical connection

Heating plate modification for DC operation

Modified heating plate

OXFORD PRODUCT DESIGN

Use of 6pcs 100W cartridge heater & original heater for total of 650W

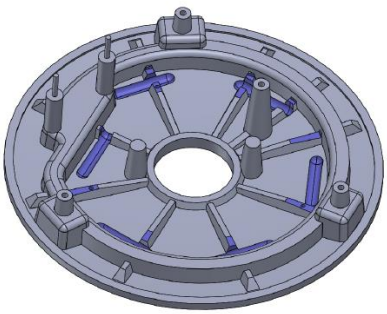

Machine the bottom side of the aluminium heating plate to create pockets to mount the cartridge heaters and fix the securing plate. As the machining is simple this should be relatively low cost.

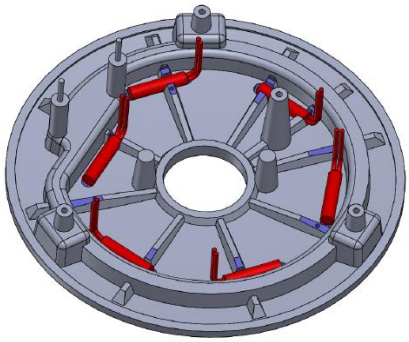

Cartridge heaters can be located and fixed with thermal paste or thermal adhesive. They are equally space and located close to the thermal mass and the existing heating element

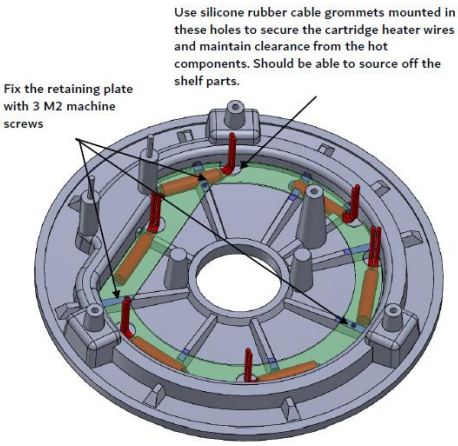

A securing plate is screwed to the heating plate to ensure reliable thermal contact and provide wire management. This plate can be laser or water cut from sheet material.

Amazon Basics pressure cooker

Electronics interface

OXFORD PRODUCT DESIGN

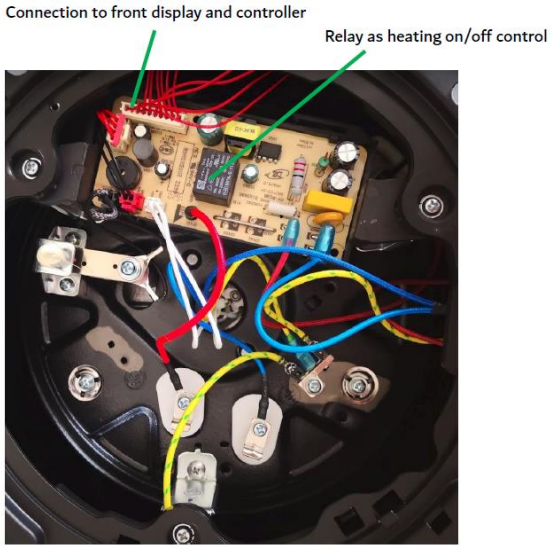

Existing power electronics

Custom electronics required:

- High current power switch -> replaces relay control
- Power supply for electronics (12V and 5V from 48V)
- 50Hz generator to mimic AC signal measurement to controller

Fits inside bottom space of cooker!

Suitable 48V power switch

Infineon BTS50085-1TMA/TMB

- 5-58V
- Smart high side switch
- ~1.5W power dissipation
- Integrated safety features

13 Recommendations at Phase 0

13.1 Phase 1 - Prove the concept

During phase 1 we only need a solution which can be applied to one model of EPC. It should demonstrate adaptive power control as this is a key feature and it should include datalogging to gather trial data. It should be designed using as much off the shelf technology as possible to minimise development timescales and costs.

Direct 48V operation is preferred as it provides the highest efficiency, compared to DC to AC or DC to DC converter. A custom hot plate could be considered, which can be heated using high power resistors or cartridge heaters. These are readily available off the shelf.

Alternatively, it may be possible to remove the need for a custom heating plate and attach heating resistors with thermally conductive, high temperature adhesive. Further investigation would be required to assess if this is a viable option.

If required, the heater can be implemented as a dual element construction by selecting two appropriate sets of resistors. This would allow multi-level power control as described in earlier section. An added benefit is that the current through each set of resistors is similar to that found in a 110v AC EPC. This allows use of standard thermal fuses because the current through each element is similar to that in the 110v product.

On a device with the Instant pot style of construction the power board would be replaced with a new design and the user interface board would be retained.

13.2 Phase 2 – Conversion kit

To help prove the market for EPC it should be possible to develop a 48v DC EPC conversion kit. The best option for this is not clear at the moment as it is a trade off between technical and commercial issues.

It would be possible to design a kit based on the proof of concept work with a 48v heater. A design of this type of conversion kit would only be suitable for one or a small range of EPCs and would need significant work to fit.

As an alternative, a 48v DC to 220V AC inverter could be used. This would work with a wide range of unmodified EPCs, but would not provide adaptive power control and could be relatively expensive and inefficient.

Finally, a 48V DC to 48V- 110V DC converter could be developed. This could be used with many 110V EPC, but would require modification to the EPC and probably additional external circuitry.

13.3 Phase 3 – Volume manufacture

Based on this initial analysis a direct 48v DC operation EPC is likely to be the most cost effective for high volume manufacture. The basic concept for this low voltage DC operation has been demonstrated by the 12v and 24v models which are available. A dual heater element allows potential for low cost adaptive power control to optimise the performance for home solar and weak grid applications.