MECS-LEIA Project Report

(Public version)

Pay As You Cook (making electronic cooking assets affordable)

Produced by: M-KOPA

For: DFID and Loughborough University

December 2021

This material has been funded by UK Aid from the UK Government and is implemented by the Foreign and Commonwealth Development Office; however, the views expressed do not necessarily reflect those of the UK Government.

Contact Details:

Katherine Owens

M-KOPA Labs

6th Floor, One Crown Square

Woking, GU21 6HR

U.K.

katherine.owens@m-kopa.com

https://m-kopa.com/

Document Control Sheet

Issue Status	Author(s)	Reviewed By	Loughborough University Approved By	Issue Date
Draft version	Katherine Owens	Jane Spencer, Simon Batchelor		September 2021
Final version	Katherine Owens	Simon Batchelor	Jane Spencer	December 2021

1. Executive Summary

1.1 Clean cooking is an area in which M-KOPA's rural, off-grid customers require innovative solutions, as they still largely depend on wood, charcoal and other inefficient and harmful fuels for their daily cooking needs.

1.2 The provision of Pay-As-You-Go (PAYG) cooking systems powered by Solar Home Systems (SHS) could unleash time, financial and energy savings, if a product solution enables customers to displace previous spend on traditional (often polluting) cooking fuels for clean energy without significantly changing current cooking behaviours and norms.

1.3 With support from the MECS programme, M-KOPA Labs sought to find a clean cooking solution that is technically feasible, scalable, and aspirational for the biomass cooks that dominate M-KOPA's customer base.

1.4 We undertook desk research on available electric cooking devices and the market, before assessing product-market fit through a series of human-centered design approaches; primary research in Kenya to understand the cooking practices and preferences of predominantly biomass cooks; and technical in-market assessments to measure power requirements of various cooking devices and ideal power sources for various electronic appliances.

1.5 We found that existing clean cooking devices are too energy intensive for M-KOPA's current and pipeline range of SHS. From a product standpoint, in order to affordably power an off-the-shelf electronic cooking device, a power system must either be capable of hybrid charging (i.e., a mix of grid, solar and battery power), or appliances must see a breakthrough in energy efficiency to reduce the high consumption to transform electricity into instantaneous heat.

1.6 Moreover, from a customer need's perspective, we found that no one device, by itself, can address current household cooking requirements. Multiple clean devices will be needed to fully displace carbon-emitting fuels from the kitchen, further increasing the specs and size of a DC power system and, thus, challenging the economics and affordability of a scalable PAYG system for M-KOPA customers.

1.7 That said, there is much innovation to be realised in this space, both with the cooking appliance, the ability to power it with affordable solar energy, and the target market. Opportunities include:

- A growing interest in innovative clean cooking devices, from start-ups and established players - indicating clean cooking is a space to watch as new, efficient technologies are brought to market;
- A new target market: biomass cooking has been found to be very prevalent in urban households - not just rural villages; and
- The potential to explore whether cooking devices could be powered by M-KOPA's emerging hybrid (grid+solar+battery) power system that could affordably heat these energy-intensive devices.

1.8 M-KOPA will continue to explore these opportunities, in order to realise PAYG clean cooking for its customers.

Table of Contents

2. Introduction

2.1 M-KOPA is a provider of flexible and affordable pay-as-you-go (PAYG) products such as solar home systems (SHS), TVs, and smartphones, and digital services such as cash loans and agricultural input credit. We serve low-income customers that live off-grid in east Africa (currently 1.4 million customers in Kenya, Uganda, and Nigeria – approximately 3.5 million beneficiaries). Nearly 20,000 customers have purchased fuel efficient charcoal stoves from M-KOPA as upgrade sales.

2.2 The principle of the PAYG method successfully developed by M-KOPA, is that it provides a flexible and affordable repayment method that enables low-income customers, with few assets and limited credit histories, to acquire valuable assets (such as SHS and/or smartphone) and build a positive credit history.

2.3 Through our sales of fuel-efficient charcoal stoves, we know that women and children bear the burden of cooking with carbon fuels, and therefore suffer the negative health impacts of inhaling smoke as well as the risk of injury from fire. Cleaner cooking will help these women and children, while addressing the sustainable development goals (2,3,5,6.7,15) – particularly goal 7 – which is to ensure access to affordable, reliable, sustainable and modern energy for all.[1] The health, environmental, and societal benefits of shifting biomass cooks to clean cooks will have a seismic effect since three billion people cook with biomass globally.

2.4 An affordable clean cooking solution was seen as a high-potential PAYG asset to bring millions of new customers into the fold of PAYG financing, whose repayment will be underpinned with a quality product. Therefore, our interest is spread across improving livelihoods and health, environmental good, quality asset ownership and commercial success.

2.5 Evidence continues to mount showing the efficiency of new electric cooking devices is approaching the level required to match the outputs of a DC, off-grid SHS – in terms of both power requirements and final cost to the customer. With falling PV module and battery prices, the solar-to-power cooking solution stoked M-KOPA's interest to explore this product class as a priority area of R&D study.

2.6 At the start of this project, we partnered with appliance maker Bosch. Both M-KOPA and Bosch have extensive experience developing high-quality electronic appliances. Bosch is a leading provider of electric cooking solutions and M-KOPA has successfully developed and delivered affordable appliances for low-income customers living off-grid. M-KOPA has also worked with Embraco (part of the Whirlpool Group) to develop a PAYG fridge (powered by a SHS), and with Bosch to develop a PAYG solar water heater. These projects have enabled M-KOPA to successfully develop a process through which to undertake R&D for entirely new products (for the customer group), taking into account the considerable upfront CAPEX costs involved in manufacturing appliances at scale. In addition, M-KOPA has developed six series of SHS appliances

[1] Iessa, L., De Vries, Y.A., Swinkels, C.E., Smits, M., Butijn, C.A.A., 2017. What's cooking? Unverified assumptions, overlooking of local needs and pro-solution biases in the solar cooking literature. Energy Research & Social Science, Volume 28, pp. 98-108.

(the latest being the MK6500 capable of powering the fridge) that have been successfully sold and operated by 1 million low-income off-grid customers.

2.7 We are not aware of any electronic cooking products that have successfully been sold at volume on a PAYG basis to low-income off-grid households – which is the market that this project focused on. The initial market was formed by the "paid-off" customers within M-KOPA's 1.4M base in east Africa – those customers who have successfully acquired their SHS and wished to purchase additional valued and productive products on a PAYG basis. M-KOPA has successfully proven that innovative combinations of technology and financing can unlock access by these customers to: lighting, radios, TV, refrigeration. These principles would be applied to the efficient electric cooking opportunity.

2.8 M-KOPA aimed to repeat the process it employed to develop affordable refrigeration, to further test cooking device power requirements, SHS outputs, and to project likely product price to end-customers. Our early stage research evaluated the feasibility and applicability of an energy efficient electric cooker that fits into the M-KOPA product roadmap, capable of commercial scale. Bosch participated in order to understand the opportunity in Africa and also South Asia.

2.9 This was an early stage project, and we did not anticipate developing a solution at this stage which would be ready to go into production. Rather, the objective was to develop a clear product vision, with a viable development plan and route to market – that will be developed following the project.

Aims of the project

2.10 The aim of this project was to test the following hypothesis: If the efficiency of new electric cooking devices is near the level required to match the outputs of a DC-powered, off-grid solar home system (SHS) – in terms of both power requirements and final cost to the customer - then M-KOPA will find a clean cooking solution that is technically feasible, scalable, and aspirational for the biomass cooks that dominate M-KOPA's customer base.

Objectives of the project

2.11 This project undertook research, testing and feasibility checks to assess three key variables:

1) the power requirement of electronic cooking devices;
2) the power output of the solar power device; and
3) the ability and willingness of customers to adopt and pay for it.

The objectives therefore were to:

1) Research and undertake development of available efficient electric cooking devices;

2) Explore options to provide power from current (or pipeline) power devices to supply sufficient power;
3) Develop a methodology to embed the necessary security into the cooking device to enable the PAYG financing model;
4) Develop bill of material (BOM) and pricing projection models for the final product concept;
5) Undertake initial customer testing to validate the need and test pricing options; and
6) Prepare an implementation plan and budget for further development of the selected solution.

3. Methodology

Outline of the concept

3.1 This project sought to test if PAYG financing could unleash a clean cooking solution much like it did for lighting. It explored the technological and cultural obstacles that could limit the adoption rate of a PAYG electric cooker.

3.2 The methodology for the project involved the following workstreams:

1. Desk research on available electric cooking devices, the market, and, subsequently, product-market fit;
2. Primary research and data collection in Kenya to understand the cooking practices and preferences of predominantly biomass cooks; and
3. Technical assessments to measure power requirements of various cooking devices and ideal power sources for them.

3.3 For workstream #2, M-KOPA held a Cooking Exhibition at its Nairobi-based campus, where urban-based cooks provided insight into their cookstove purchasing criteria and considerations. We also visited 6 Kenyan cities/towns to collect the 'voice of the customer' through home-visits, retailer interviews, and discussions with M-KOPA sales agents. Later M-KOPA Labs held a series of focus group discussions with 'weak-grid' connected customers to understand the fit of an EPC, hotplate and/or eco-kettle as appropriate substitutes for charcoal cookstoves. M-KOPA also collaborated with UK-based clean cookstove designer to test cook its prototype in Kenya in a real home setting to assess the cooker's potential and profile, where the test user diarised his experience preparing traditional Kenyan meals.

3.4 For workstream #3, Labs and M-KOPA's Hardware Engineering team constructed a large appliance test station at M-KOPA's HQ in Nairobi. This station comprises 3kWp PV modules, DC/DC charger, 1kWh battery, DC/AC inverter. The PV modules are ca. 20m^2 and the remaining elements will be enclosed in a cabinet that will be ca. 50 x 50 x 100cm. To our knowledge, this is the only large appliance testing station of its kind in Kenya to assimilate real, controlled in-market testing.

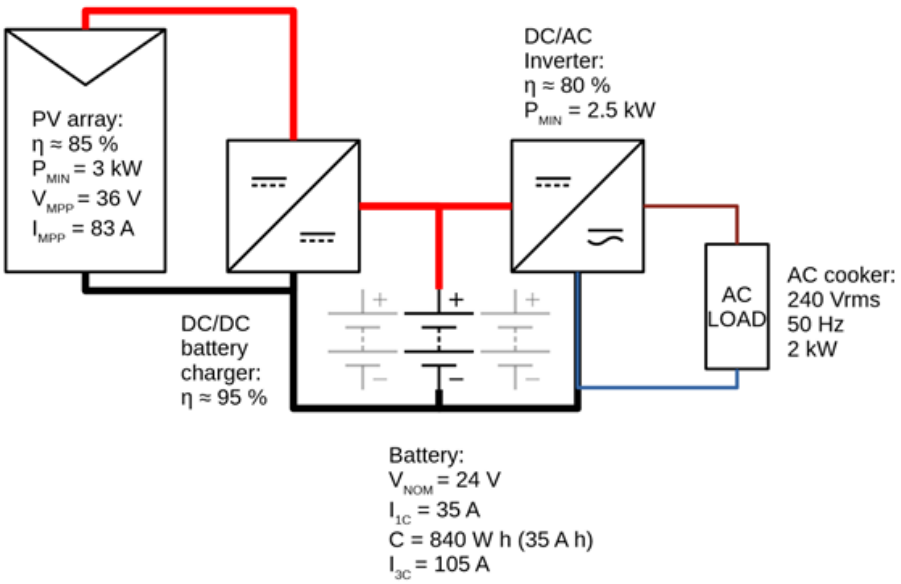

Figure 1: Schematic of the *Large Appliance Testing Station*

Figure 1: Large Appliance Testing Station in Nairobi, Kenya

3.5 The intention of this mixed research approach was to identify suitable e-cooking devices and explore their compatibility and suitability for PAYG financing, anchored with one of M-KOPA's existing (or pipeline) DC power systems that can sufficiently power the e-cooking device and be controlled remotely to synchronise payments and customer usage. We would then define a Bill of Material and use past data to build pricing projection models.

3.6 However, through early lab tests, M-KOPA's Hardware Engineering team found that existing off-the-shelf electric cookers are too energy intensive for the existing and

pipeline range of SHS, and prototypes under development by start-ups. Therefore, the project pivoted to focus on customer requirements with the intention to - in the future - collaborate and co-design a clean cooking appliance with an experienced product designer who equally sees the market opportunity to lower the power requirements to achieve the right balance of price and power for customers.

Assumptions made

3.7 We were aware of evidence that suggested the efficiency of electric cooking devices was coming close to the level required to match the outputs of a PAYG SHS. We therefore assumed that after finding a suitable device, we would be able to assess it for PAYG compatibility, create a BOM, and project prices. Unfortunately, this assumption was incorrect, and the devices we reviewed cannot yet be powered efficiently by an affordable solar system. As we were not able to find one appliance that could suit the majority of cooking needs in the kitchen, coupled with our finding that customers fuel stack, we proceeded to test a range:

1. Hotplate for fast cooking;
2. EPC for slow cooking; and
3. Eco-kettle for water heating.

We found that multiple clean devices will be needed to fully displace carbon-emitting fuels from the kitchen.

3.8 We assumed that customers would demonstrate willingness to adopt new, clean cooking solutions, much like customers' readily displaced kerosene lanterns for lighting solutions. However, unlike lighting, cooking is a cultural practice and one for survival, anchored to societal norms. The solution would not be as simple as making a LED light accessible to the market. Cooking behaviour and preferences do not simply change according to technological advances, rather solutions must fit into their lifestyles: financially, socially and culturally. Therefore, we heightened our efforts to better understand biomass cooks and their behaviours and attitudes toward cooking.

3.9 We have an expectation that the grid will continue to expand to peri-urban and, eventually, rural areas. While this may be the case, the timeline of this roll-out extends further than the immediate need to shift biomass cooks to clean solutions to achieve SGD7.

4. Implementation

The work conducted

Initial desk-research: Understanding the e-cooking landscape

4.1 M-KOPA Labs first sought to better understand the e-cooking landscape. Biomass cooking, solar cooking and improved cooking devices were all examined. The solutions that were considered relevant to M-KOPA's target audience (biomass cooks) were: electric hotplate, induction hob, slow (rice) cooker, and electric pressure cooker. Their descriptions with accompanying pros and cons can be found in ***Appendix A*.**

Feasibility study: Understanding cooking preferences and the market

4.2 A feasibility study was undertaken to map biomass cooking behaviours across Kenya. A Cook Study Survey collected data on demography, common household meals and time taken to cook; sources of cooking fuel and place where customers cook; cooking/heating devices customers use at their homes; and foods cultivated/ farmed by customers. The findings can be found in ***Appendix B*.**

4.3 Following Labs' attendance at the Clean Cooking Forum in Nairobi, the project was re-assessed, opening the initial research to other available products in the market and, thus, expanding the feasibility study. This expansion sought to gather more information about our customers in an effort to better segment them, e.g., fuel stack in urban settings and respective spend.

4.4 The activities that we completed included:

a. Gathering primary data from our customer base across 15 towns/cities and from our Nairobi headquarter staff. These data have enabled us to develop a better understanding of the following factors:
    i. Product-Market fit.
    ii. Appropriate value proposition to each household's economic buyer (breadwinner) and user (cook).
    iii. Prospective customer journey from point of interest to point-of-sale (see ***Appendix D*** for examples of customer journey and empathy maps).
    iv. Target user personas.

b. Market visits to 6 cities (Kisumu, Kericho, Nakuru, Meru, Malindi and Machakos).
    i. At these locations we carried out workshops with our local sales team; met with local Chama (informal savings and credit) groups and visited our customers at their homes. In total, we listened to over 120 Kenyans to gather rich insights on household cooking behaviour, fuel purchasing preferences and pain points - 54 of whom were local M-KOPA sales agents.

User Attitudes and Preferences Mapping:

4.5 Three improved cookstoves and an electric pressure cooker were assessed at a Cooking Day (Upisha Bora Day) even on M-KOPA's campus in Nairobi, Kenya to identify user requirements when buying cook stoves, and to understand what features a suitable e-cooker would need. The Upishi Bora Day involved a cookstove exhibition and a cook-off amongst four teams made up of our HQ staff members. This event gathered valuable information about the factors of influence for cookstove buyers, and desirable features of cookstoves. See ***Appendix C*** for recap of exhibition.

Figure 2: M-KOPA Staff Members examining and discussing improved cookstove and EPC.

Assessing available technologies

4.6 M-KOPA Labs then undertook an extensive assessment of available technologies through a sizing exercise and testing. The technologies were selected through the initial research report and through meeting companies at the Clean Cooking Forum. Seven cookers were "sized" to measure the required solar power output to reliably configure electric cooking. Of these, four were selected to proceed for subsequent testing and market testing.

4.7 The results from the desk-based sizing exercise informed our engineers and researchers to select three cookstoves with the highest potential for technical feasibility relative to M-KOPA's solar product pipeline (see 4.21). Engineers then carried out two cooking experiments to test the cookstoves' technical efficiencies: water boiling and rice cooking.

Cooking Product	Power Rating	Rationale
Amazon Basics Electric Pressure (EPC) Cooker	1000W	Passive electric cooking solution for slow-cook, heavy foods at a lower cost than charcoal
Cusimax Electric Hotplate	1200W	Familiar cookstove with low behavioural cost for migrating biomass cooks
Vektra 1.2L Stainless Steel Eco-Kettle	1350W	Energy-saving kettle with low energy draw for warming water throughout day

Figure 4: Tested products

4.8 We built a Large Appliance Testing Station at M-Kopa's HQ in order to test these devices in real-market conditions. Our energy monitoring technologies enabled us to record the 'real' power draw of appliances for everyday cooking needs.

4.9 Labs further examined the suitability of a new type of solar-powered cookstove prototype by a UK-based start-up product designer. The device is a battery-free cookstove that captures and stores solar energy in a resistor, or 'warmstone', that stays warm throughout the day to allow for multi-meal cooking. In March 2020, the project was paused due to Covid restrictions until M-KOPA Kenya staff could return to HQ for further lab tests and consumer-centric research - namely

surveys and focus groups with urban-based cooks - were carried out. Lab tests assessed the cooking abilities of the three, short-listed devices: an EPC, a hot plate and eco-kettle on their efficiency to cook beans and rice, as well as boil water.

Cooking Test	Test Protocol
Water Boiling	Heat 1 litre of water until it reaches boiling point
Rice Cooking	Cook 0.5kg of rice with 1.25 litres of water
Beans Cooking	Cook 0.5kg of beans with 1.25 litres of water

Figure 5: Cooking tests and protocols

4.10 This was followed by focus groups which determined the degree of appeal of the three proposed clean cooking products bundled with the M-KOPA PAYG model as alternatives to traditional cookstoves and/or other options in the market. We conducted three focus group discussions with a total of 27 participants (nine participants per group/appliance), screened from M-KOPA's Kenyan workforce.

A Focus on Gender

4.11 In Kenyan households, women still bear the majority of the responsibility/burden for managing household budgets, for shopping and cooking for the family. Women are often the main purchasers and users of household cooking fuels, and much of their time is spent obtaining fuel, or cooking meals. Approximately 50% of our Kenyan customers are female.

4.12 Women and girls formed the foundation of the user personas for whom we were designing. The personas implicitly explored household gender dynamics in the purchasing process to acquire a cooking solution. The feasibility study primarily targeted women to map what they need from a cooking solution, and the Chama groups that we met during the market visits were predominantly female.

Figure 6: Lynette taste-testing meals cooked in the Cooking Exhibition contest

4.13 Our Voice of Customer Global Champion – Lynette Awuor – was involved in the product demonstrations and supported the Cooking Day planning. Her perspective as a woman and one who closely understands our customers brought essential insights to this project.

The project findings

Project Findings

4.14 Overall, it was found that the power requirements of existing e-cooking devices are beyond the capacity of M-KOPA's SHS to enable non-daylight cooking hours, and the cost to provide this level of power supply would be prohibitive for customers.

4.15 Further, when exploring options of stacking multiple devices, and/or using different sources of energy for different types of cooking, it was still found to be too energy consuming and expensive to appeal to customers.

4.16 No one device, by itself, can address all household cooking requirements. We found that multiple clean devices will be needed to fully displace carbon-emitting fuels from the kitchen. The insights we gauged from this research have helped us to identify which of these devices has the greatest potential and what current roadblocks facing their adoption are. The points below highlights these:

EPC and Electric Kettle are the highest opportunity areas: Marketplace and focus group discussions revealed that there is greater opportunity and demand for the electric pressure cooker and the electric kettle. Although the estimated CAGR for the hotplate is higher at 13%, customer sentiments indicate there is a preference for the electric pressure cooker and electric kettle at 90% and 100% willingness to adopt respectively, compared to the hotplate at 64%.

Figure 7: Opportunity areas

4.17 Kenyans are interested in, and excited by, the prospect of using solar energy to power their cooking. They consider grid electricity to be expensive and unreliable, so would welcome the opportunity to use electricity from SHS. Therefore, there is much innovation to be realised in this space, both with the cooking appliance, the ability to power it with solar energy, and the target market. Opportunities include:

- A growing interest in innovating clean cookers, from start-ups to established players indicates clean cooking is a space to watch as new, efficient technologies are brought to market.
- Unlike previously thought, biomass cooking is very prevalent in urban areas - not just rural areas. This insight presents opportunities to serve this market, especially as M-KOPA builds its presence in urban Nairobi (Kenya) and Kampala (Uganda) with the rapid scale of its PAYG Phone, which can serve as customers' anchored PAYG device. As a result, this paves the way for subsequent PAYG assets.
- Labs will continue to explore whether cooking devices could be powered by M-KOPA's emerging hybrid (grid+solar+battery) power system that could affordably heat these energy-intensive devices. Alternatively, there could be a route to market whereby M-KOPA sells PAYG AC, grid-tied clean cooking devices, but further research and testing is needed to understand customers' willingness to finance this devices on a 1-2 year timeframe.

Technical findings

4.18 Power source:

- Cooking is an energy intense activity. Grid electricity would be best suited to meet the load profiles of current off-the-shelf appliances, however the variability and the relatively high tariff costs of electricity for cash-constrained Kenyans (who value price predictability) are the two main reasons why grid-connected Kenyans remain attached to biomass cooking. Further, AC, off-the-shelf electric cookers are incompatible with

DC-powered off-grid power systems, meaning further product development is required to innovate energy efficient DC appliances.

- SHS are prominent in Kenya, providing power for household lighting and some appliances (TV and Fridge). However, the size of a SHS would need to increase significantly to power cooking devices, and this increase in size makes solar+battery (alone) ill-suited as a power system for reasons relating to: overall size of the installed system, unattractive lifetime economics, and high credit risk as a PAYG asset for customers and M-KOPA. Our understanding from scaling PAYG lighting, TVs, Phones, and Fridges is that customers do not wish to lock into a payment plan longer than 18-months and require a daily payment of equal value to current spend of displaced cost (i.e., kerosene fuel) or one that unlocks significant intrinsic value (i.e., access to critical information and household enjoyment with TVs).

4.19 Cooking device:

- Insights from market research, as illustrated in the picture below, show a divergence between perceived need / applicability of various solutions and energy efficiency. No one device sits in the “sweet-spot” of the top right corner.

Figure 8: E-cooking landscape

- Following the early power output tests, engineers and researchers selected two cookstove types with the highest potential for technical feasibility and suitability for off-grid households with M-KOPA’s solar product pipeline in mind. M-KOPA engineers designed two cooking experiments to test the cookstoves’ technical efficiencies - water boiling and rice cooking. These tests would benchmark their ability to carry out standard cooking tasks in Kenyan kitchens against other fuel substitutes, i.e., LPG. Below is a summary of the results from the water boiling tests for both products compared against LPG, as the benchmark due to the aspirations held by the Kenyan customer base.

Test	LPG Burner Stove (benchmark)	DC electric pressure cooker	DC-powered (battery-free) cookstove
Water Boiling Test	3 minutes	40 minutes (see Fig 3)	4 minutes
Rice Cooking Test	15 minutes	80 minutes	20 minutes

Figure 9: Cooking test results

- In the extension phase of the research, M-KOPA explored using different types of devices: an EPC, one-burner hotplate and an eco-kettle. The tests were undertaken at M-KOPA's Large Appliance Testing Station at HQ (Nairobi) to assimilate real-world conditions. It was found that no device was better than the others in all three types of cooking (boiling water, cooking beans and rice). Each performed better and worse in the different categories. Below is a summary of the test results from the three tests. (As an Eco-Kettle has a singular purpose of heating water, it was excluded from the rice and beans cooking tests.)
    - Notably, the Eco-Kettle performed best in the water boiling test (as expected), while the hotplate outperformed the EPC for boiling water and cooking rice. The EPC proved to be more efficient at cooking beans. Therefore, it was found that no one device could be an 'all-in-one' solution that would meet the range of Kenyan daily cooking needs.

Cooking test	EPC	Hotplate	Eco-Kettle
Water boiling test	16 mins 55 secs	10 mins 10 secs	6 mins 18 secs
Rice cooking test	38 mins	30 mins	-
Beans cooking test	43 mins	52 mins	-

Figure 10: Cooking test results (extension phase)

- While previously thought to be powered as an extra appliance to M-KOPA's largest solar power system (which can power a 32" TV for 12-hours), the eco-Kettle was unfortunately found to be too energy consuming and therefore would not be affordable/competitive for our target market.

Kenyan Market Findings

4.20 *Cook Survey findings:*

- The cook survey helped us to understand eating and cooking habits and preferences. We surveyed 328 M-KOPA customers, through a telephone structured survey. We collected information on: demography; foods that customers cook; how long it takes to

cook; where they cook food; and sources of cooking fuel. An example of findings includes: ugali, vegetables and rice/pilau are the primary foods eaten for lunch (11am-4pm) and dinner (6pm onwards), and firewood is the most preferred primary source of cooking fuel (60%) while charcoal is the most preferred secondary source of cooking fuel (40%).

4.21 *Cooking Exhibition Day (*Upisha Bora Day) *findings:*

The Cooking Day was designed principally to map user requirements when buying a cook stove, and to understand what features a suitable e-cooker would need. Our findings include:

- Urban cooks are still predominantly reliant on charcoal. This inspired our pivot to focus on these cooks, who have a higher fuel outlay than rural cooks (who use free firewood) and are time-poor and, therefore, need modern energy appliances. They represent a more immediate market for M-KOPA to reach.
- Discussions about power source were pivotal. If grid-powered, there was less interest despite the efficiencies and passive cooking type described. If solar-powered, there was a lot more interest. This was for two reasons – Kenyans do not love KPLC (the grid electricity supplier) due to 1) intermittent service delivery and 2) lack of price predictability, especially given energy costs represent a large portion of the household budget and solar energy is perceived to be free post system repayment.
- Size matters: cooks want to be able to cook large amounts for when guests come over or for special occasions.
- Technological (extra) features are exciting e.g., USB ports.
- Aesthetics matter i.e., the EPC's sleekness was viewed positively.
- More than half of the respondents cited fuel type, price and ease of maintenance as important factors of influence when buying a cookstove.

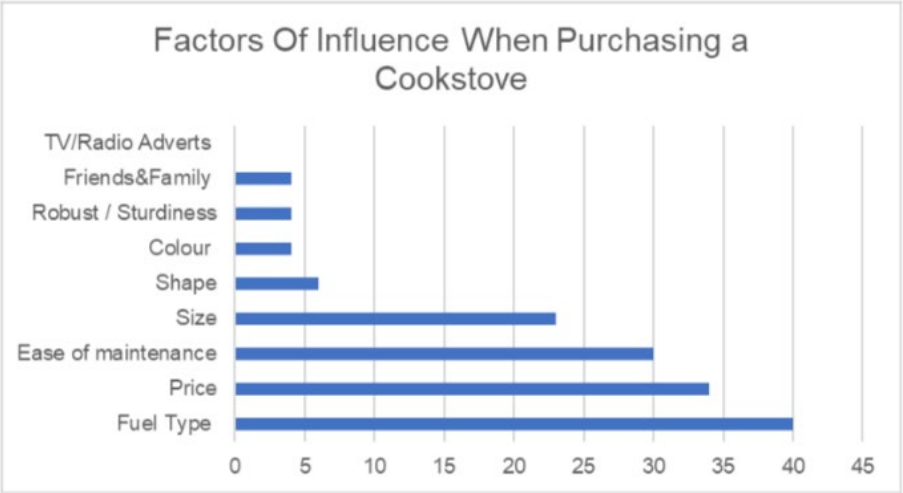

Figure 11: Factors of influence when purchasing a cookstove

- Most 'Cooking Day' attendees have access to electricity but prefer to cook with charcoal. The urban market could, therefore, be the prime market to displace charcoal.
- Electricity is deemed to be very expensive for cooking, especially when watching TV is a more desired activity and seen as an appropriate luxury by

the family. Cooking is not of similar standing in the family. This sentiment was also shared by the surveyed population that had electricity but would rarely cook with it.

4.22 *Focus Group Findings*

- The specific objective of the customer-facing study was to understand the degree of appeal for three short-listed clean cooking products (EPC, one-burner hotplate and Eco-kettle), bundled with the M-KOPA PAYG model as alternatives to traditional cookstoves and/or other options in the market. It found that 64% of focus groups participants would adopt the hotplate, 90% would adopt EPC and 100% for the kettle.
- Factors impacting adoption of clean cooking in Kenya include:

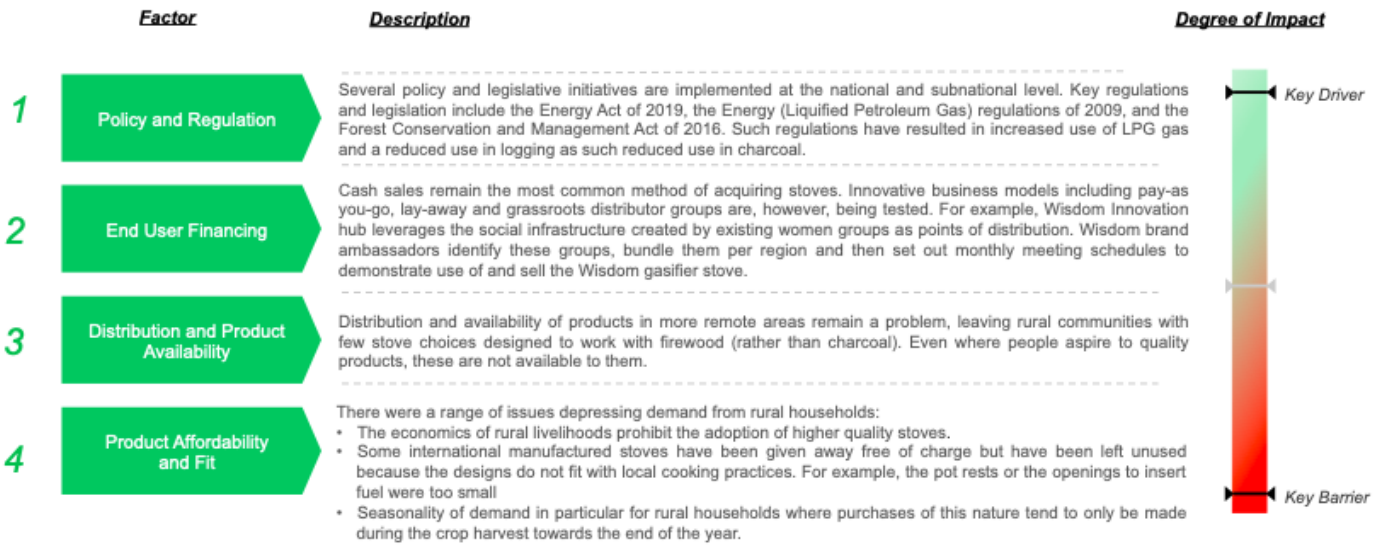

Figure 12: Factors Impacting Adoption of Clean Cooking

Using the results to move forward

4.23 There is a compelling case to design a solution for M-KOPA's traditional target customer, a rural, off-grid, biomass-fuel dependent household. Additionally, a new customer segment emerged, urban, charcoal-dependent, grid-connected households, who also require a reliable, affordable modern cooking solution. As such, these customers were explored in the extension phase of this research.

4.24 Many companies (start-up and established) continue to innovate in this space, but we have not yet seen the energy efficiency break-through in instantaneous heating, such as how M-KOPA discovered with TVs and Fridges (co-designed with a Whirlpool Group company) in order to achieve a power and price balance that is attractive for customers.

Limitations of the innovation/approach/design/system

4.25 A solar home system domesticates the cooking practice, thereby limiting its impacts to the food system at large. There are approximately 7,825 street food vendors in Nairobi, and approximately 40% of Nairobi's low-income group eat from street food vendors.

This illustrates the enormity of the cooking problem beyond the household. However, this is not where M-KOPA's core competencies lie and there will be a greater focus on alleviating the household's cooking demands.

4.26 Our target urban-based user group often cooks before 9am and after 6pm, which has a significant impact on which power source is best to build a reliable device. Our solution was to resize devices accordingly, however, this showed that existing devices are not compatible with current SHS power output.

4.27 The efficiency of existing cookstoves remains a crucial bottleneck for solar cooking. Much of this challenge relates to the status quo design of appliances to receive alternating current (AC) from a power source, rather than more efficient direct current (DC), characteristic of solar power. Given most appliances are designed to plug into electric grids, which transmit AC power, M-KOPA would require integration of an AC-DC inverter to the overall power+appliance system, adding further cost onto a comparatively expensive asset for customers.

- One avenue to explore further is to reproduce these tests with DC cooking appliances. M-KOPA is in contact with companies innovating such solutions to measure the incremental energy efficiency of a DC solution.

5. Practical applications of the concept to the national cooking energy system (including costs)

5.1 There is great interest in using solar energy to power cooking devices. Kenyans do not like to use (grid) electricity for cooking as it is considered too expensive and unreliable. As solar is popular and considered "free", Kenyans would be eager to harness it to power their cooking. However, this requires the SHS to be powerful enough to support the cooking devices, which they currently are not.

5.2 Kenyans are adept at stacking cooking devices. Therefore, there are possibilities for some devices to be used with solar energy, and others using traditional fuels. While this is not completely removing the use of biomass, it is at least reducing it.

6. Next steps

6.1 M-KOPA Labs will continue to watch the space for innovations in the electric cooking, carefully monitoring the progress of existing solutions and new solutions. Our end goal is to partner with a best-in-class product designer to co-design a solution that can be brought to market via M-KOPA's proven PAYG financing platform and >6,000-person sales force. Equally, it will see additional opportunities to explore the market stickiness and willingness to finance an AC clean cookstove to M-KOPA's growing smartphone customer base who reside in urban (as well as rural) settings.

6.2 Through the MECS funded project, M-KOPA Labs has been able to significantly advance M-KOPA's understanding of available electronic cooking appliances mapped against customer needs and preferences. M-KOPA Labs will continue to explore

developments in this space with an aim of joint testing solutions with appliance players in the future.

7. Conclusion

7.1 M-KOPA Labs tested whether a PAYG clean cooking device could be powered by the company's range of SHS affordably for customers and to their needs and preferences.

7.2 After a series of lab and in-market tests, Labs concluded that current, off-the-shelf multiple devices are too energy intensive for the company's range of DC SHS to perform basic cooking tasks per suitable appliance, i.e., an EPC for rice and eco-kettle for boiling water.

7.3 Nevertheless, Labs see much innovation potential in this space, especially to serve a newly uncovered target market: urbanites who use large amounts of biomass (charcoal) and who could be incentivised to switch to cleaner cooking. Increased interest in developing more energy-efficient devices has been noticed both in start-ups, and major companies, signalling devices will continue to be developed and improved. Finally, Labs see potential in powering clean cooking devices through M-KOPA's emerging hybrid (grid+solar+battery) power system.

7.4 More work is required to better understand this new target market (urbanites), and further explore how cooking behaviour can be changed. In addition, the group will investigate using M-KOPA's emerging hybrid power system to power these energy-intensive devices.

7.5 As clean cooking is a ubiquitous need amongst its customers, M-KOPA Labs will continue to explore innovations that can enable PAYG SHS or hybrid powered clean cooking solutions to provide a cost and quality competitive alternative to charcoal, wood and kerosene.

8. Appendix

Appendix A: Electricity Cooking Research

The current solutions that are relevant to M-KOPA's biomass cooks:[2]

Solution	Description and Overall Assessment	Pros	Cons
Electric Hotplate	A coil that heats up quickly. Its wattage ranges from 1kW to 3kW. A common appliance that is widely available in the market. Its high demand peak and approximate efficiency of 50% make it unsuitable for a SHS.	· Widely available · Customer Familiarity · Can be used for heating	· High demand spikes · Poor energy inefficiency · Large system (PV and Battery) requirement · Deep discharges · Likely to shorten inverter life · Hot to touch; could lead to fires and personal injury · Need for flat bottom pots
Induction Hob	An induction stove that requires special cookware. Its wattage ranges from 1kW to 2kW. A relatively common appliance in the market. Its high demand peak and large, industry efficiency range (60% - 85%) make it unsuitable for a SHS.	· Slightly more efficient than a traditional hotplate · Not hot to touch	· Need for special cookware · High demand spikes · Poor energy inefficiency · Large system (PV and Battery) requirement · Deep discharges · Likely to shorten inverter life

2 World Future Council (2019). Beyond Fire: How to achieve electric cooking. Hivos.

Slow (Rice) Cooker	A (120W – 300W) cooker that retains most of its energy within the box, which leads to a modest demand profile and high efficiency. This makes it suitable for a SHS. It is slow to cook and often used for rice, but it does have other meal applications. It is somewhat common in the target market, primarily in East Asia due to dietary preferences.	· Low demand profile · High efficiency · Suitable for long meals common to target market	· Not suitable for all meals (e.g., deep-frying)
Pressure Cooker	A (500W – 1kW) cooker that retains most of its energy within the box, which leads to a modest energy demand profile and high efficiency. This makes it very suitable for a SHS. Not common/widely available in the market, this requires a considerable amount of education. Regardless of education, the talent of the cook will remain paramount in its adoption.	· Low demand profile · Highly efficient · Favorable electricity demand profile for SHS · Suitable for long meals common to target market · Requires less water	· High upfront cost · Lack of customer familiarity (needs education) · Too many buttons · Not suitable for all meals (e.g., deep-frying) · Limited availability in target market

Appendix B: Customer Cook Stove Report

Executive Summary of KE Cook Study Survey:

Demography

1. A typical household size has 6 people, 3 adults and 3 children.
2. The primary breadwinner is most likely to be a male and primary cook is most likely to be a female. 76% of primary breadwinners are male while 99% of primary cooks are female.
3. Most customers are not well educated. The highest level of education attained by most primary breadwinner and primary cook is primary level and below.

Foods that customers cook, and time taken to cook it

1. Breakfast mainly constitutes of a hot beverage (tea/coffee/chocolate/milk) (98%) with chapati/mandazi/pancakes (69%). Most cook breakfast before 9am and take 11-30mins for preparation.
2. Lunch mainly constitutes of ugali, vegetables and rice/pilau and is prepared between 11-4pm with 11-30mins dedicated to cooking.
3. Dinner mainly constitutes of ugali, vegetables and rice/pilau and is prepared 6pm onward with 11-30mins for preparation.

Sources of cooking fuel in rural Kenya

1. Firewood is the most preferred primary source of cooking fuel, with 60% of customer noting its use. Charcoal is the most preferred secondary source of cooking fuel, with 40% noting use.
2. Customers usually cook inside another building from their main home.
3. Most customers attain their cooking fuel by picking it up (56%) and through delivery (29%) for a median cost of KES 50.
4. For those who pick up their cooking fuel, 51% of households note the primary breadwinner assumes this responsibility, while of 42% households note the primary cook does so. Anecdotally, this responsibility is commonly shared.

Appendix C: Customer Empathy Maps

Example customer journey: Rural, biomass cook